เอกสารแนบ 1-9

มาตรการรองรับเหตุฉุกเฉิน

PTTEP

PTT Exploration and Production Public Company Limited

Environmental Management Standard

Document Code: 11038-STD-SSHE-520-009-R01

June 2017

Approval Register	
Document Subject	Environmental Management Standard
Document Code	11038-STD-SSHE-520-009-R01
Document Owner	Kesara Limmeechokchai (CSH)
Prepared by	Phanachit Dhanasin (CEN/E)

Document Custodian			
Name	Title	Signature	Date
Lawan Pornsakulsakdi	CEN	[redacted]	

Technical Revie		
Name	Title	
Luck Pasutanavin	CSA	
David Antony John	CPA	

Approval			
	Name	Signature	Date
Document Owner	Kesara Limmeechokchai CSH	[redacted]	
Approval Authority	Somporn Vongvuthipornchai CEO		

THIS DOCUMENT WILL BE REVIEWED EVERY **5 YEARS** FROM DATE OF APPROVAL OR REVISED EARLIER IF NECESSARY.

Revision History			
Rev.	**Description of Revision**	**Authorised by**	**Date**
0	New	CEO	Dec 2011
1	• Updated and re-organized the Environmental Management requirements to link with SSHE MS 7 elements. • Addressed the Company environmental strategic targets/directions in the Standard. • Added the list of environmental activities by mapping with the Project/Asset life cycle phase. • Added the risk assessment requirement of specific environmental issues i.e. climate strategy risk, water related risk and biodiversity risk. • Linked all Corporate "daughter" environmental documents in this Standard.	CEO	Jun 2017

TABLE OF CONTENTS

1. PURPOSE 1
2. SCOPE 1
3. REFERENCES 1
3.1 PTTEP SSHE CONTROLLING DOCUMENTS 1
3.2 OTHER REFERENCE DOCUMENTS 2
4. DEFINITIONS 3
4.1 GENERAL DEFINITIONS 3
4.2 ORGANISATION AND DEPARTMENTS 5
4.3 LANGUAGE 5
4.4 COMMON ACRONYMS 5
5. ROLES AND RESPONSIBILITIES 6
5.1 OWNERSHIP OF THE DOCUMENT 6
5.2 CUSTODIAN OF THE DOCUMENT 7
5.3 KEY ROLE AND RESPONSIBILITY 7
6. ENVIRONMENTAL MANAGEMENT 8
6.1 STRATEGIC ENVIRONMENTAL TARGET 9
6.2 ENVIRONMENTAL MANAGEMENT DOCUMENTATION 10
6.3 ENVIRONMENTAL IMPACT MANAGEMENT 12
6.4 PLANNING AND OPERATIONAL CONTROL 14
6.5 IMPLEMENTATION AND MONITORING 15
6.6 AUDIT AND REVIEW 15

1. PURPOSE

The Environmental Management Standard has been developed to provide the overview of the environmental management strategy and their requirements. This Standard is the overarching "mother" document for environment management in PTTEP. The other related "daughter" environmental documents shall be developed and implemented following the requirements of this Standard.

The main objective of this Standard is to assist PTTEP Assets and Subsidiaries to properly manage the Company environmental aspects and impacts in the environmentally sound management practices which include compliance with the regulation and the Company requirements, ensure mitigation and prevention of the environmental pollution, and encourage the continual improvement culture. The regulation requirements shall take precedence over this Standard in case the host country regulation is more stringent than this Standard. If the host country regulation is less stringent than this Standard, the advice from Environment Management Department shall be considered as a final solution.

2. SCOPE

This Standard applies to all PTTEP Assets, support functions and Subsidiaries, throughout the project life cycle, which includes acquisition, seismic survey, exploration, drilling, engineering design, construction, installation, operation, modification and abandonment.

PTTEP Assets, addressed in this Standard, include the supporting functions i.e. Petroleum Support Base at Songkhla and Ranong and PTTEP Core Research Center, and Head office support.

This Standard specifies the environmental management requirements of the key specific environmental issues may arisen from the Company activities. For general SSHE requirements, refer to SSHE Management System Manual (11003-STD-SSHE-MNL-000-001-R04).

3. REFERENCES

3.1 PTTEP SSHE CONTROLLING DOCUMENTS

Document Number	Document Title
11003-STD-SSHE-MNL-000-001-R04	SSHE Management System Manual
11003-STD-SSHE-300-002-R01	Corporate Oversight of SSHE MS Standard
SSHE-106-STD-100	SSHE Roles and Responsibilities Standard
SSHE-106-STD-400	SSHE Risk Management Standard
SSHE-106-STD-700	Audit and Review Standard
12002-PDR-SSHE-503-005-R01	Corporate Spill Contingency Plan

Document Number	Document Title
12002-PDR-SSHE-612-003-R02	Environmental Performance Reporting Procedure
SSHE-106-PDR-401	Environmental Impact Assessment for Exploration and Production Procedure
SSHE-106-PDR-521	Waste Management Procedure
SSHE-106-PDR-611	Environmental Baseline Survey and Monitoring Procedure
12002-GDL-SSHE-522-008-R01	Biodiversity and Ecosystem Services Management Guideline
12146-GDL-SSHE-529-014-R00	Methane Survey Guideline
SD-2000-GDL-001	Sustainable Development Guideline
SSHE-106-GDL-523	Water Management Guideline
SSHE-106-GDL-524	Energy Efficiency Guideline
SSHE-106-GDL-526	Net Environmental Benefit Analysis Guideline
SSHE-106-GDL-527	Gas Flaring and Venting Reduction Guideline
SSHE-106-GDL-540/12	Naturally Occurring Radioactive Material (NORM) Management Guideline

3.2 OTHER REFERENCE DOCUMENTS

Document Number	Document Title
ISO 14001:2015	Environmental Management Systems – Requirements with Guidance for use.
UNEP IE/PAC Technical Report 37, E&P Forum Report 2.72/254 (1997)	Environmental management in oil and gas exploration and production, Joint E&P Forum/UNEP Technical Publication.
-	Executive Guide to a Carbon Pricing Leadership – A Caring for Climate Report, UNGC and WRI.
-	Decommissioning Environmental Assessment Guideline, Department of Mineral Fuels and Petroleum Institute of Thailand, May 2011.

4. DEFINITIONS

4.1 GENERAL DEFINITIONS

Terminology	Description
Biodiversity	The variability among living organisms from all sources including, inter alia, terrestrial, marine and other aquatic ecosystems and the ecological complexes of which they are a part; This includes diversity within species, between species, and of ecosystems.
Carbon Credit	An instrument that represents ownership of one metric tonne of carbon dioxide equivalent that can be traded, sold, retired, etc. Credits are awarded to holders that have reduced their greenhouse gases below their emission quota. Carbon credits can be legally traded in the international market at their current market price.
Carbon Pricing	A mechanism to integrate the local and economic costs of climate change into financial decisions. It attaches a value to investments that reduce such costs. Many carbon pricing system are using market drivers to allocate capital to those solutions that reduce GHGs at least cost, making them more efficient than other instruments such as traditional command-and-control regulations. Meanwhile, companies are finding ways to adapt the concept for their own strategic response to climate change risks and opportunities.
Carbon Tax	A per-unit fee typically imposed on fossil fuels and other products (e.g. refrigerants), based on the amount of greenhouse gases (GHGs) they emit. A carbon tax may be implemented as a fee on coal, for example, based on the amount of carbon dioxide (CO_2) that is released when coal is burned. The tax created a cost for emitting GHGs into the atmosphere (for example, 25 USD per tCO_2e) and in doing so provides a financial incentive for reducing GHG emissions. A carbon tax policy may also include tax credits for activities that remove GHGs from the atmosphere.
Decommissioning Environmental Assessment	A study involving the analysis, identification, prediction, evaluation and mitigation of potential impact (including General impact and/or Cumulative impact) derived from

Terminology	Description
	various decommissioning options, within a specified study area, to enable an informed decision on the most appropriate decommissioning methods to be used.
Energy Consumption Intensity	Total energy consumption (in GJ) divided by gross hydrocarbon production (in Tonne). Energy consumptions includes: (1) fuel consumption whether from self-generating or purchasing from external source (2) electricity, heat and steam whether from self-generating that is not double counted with fuel consumption or electricity, heat and steam purchased for consumption.
Environmental Impact Assessment	An assessment of the possible positive or negative impact that a proposed project may have on the environment, together consiting of the natural, social and economic aspects.
Fresh Water	The constituent content of freshwater should be defined by local regulations. In the absence of local regulation, a limit of 2,000 mg/l of TDS (recommended by IPIECA) is the guidance for categorization of fresh and non-fresh for surface and groundwater.
Greenhouse Gas (GHG)	Greenhouse gases are those gaseous constituents of the atmosphere, both natural and anthropogenic, that absorb and emit radiation at specific wavelengths within the spectrum of thermal infrared radiation emitted by the Earth's surface. GHGs under the Kyoto Protocol include: carbon dioxide (CO_2), methane (CH_4), nitrous oxide (N_2O), hydrofluorocarbons (HFCs – a group of several compound), perfluorocarbons (PFCs – a group of several compound), sulphur hexafluoride (SF_6), and nitrogen trifluoride (NF_3).
GHG Emission Intensity	Total mass of GHGs released to the atmosphere over a specified period of time (in Tonne CO_2 equivalent) divided by gross hydrocarbon production (in Thousand Tonne)

4.2 ORGANISATION AND DEPARTMENTS

Terminology	Description
Corporate	Refers to the PTTEP business groups hierarchically above Asset level, and located in the PTTEP headquarters, Bangkok.
Function Group	Refers to a Corporate level business group. These may have associated Divisions, Departments, or operating Assets within their hierarchy.
Division	A business group may have one or more distinct groups within its hierarchy. These are referred to as Divisions.
Asset	Refers to an operating Asset, site, or location within a respective Function Group.
Department	A subgroup within a Function Group, Division or Asset.

4.3 LANGUAGE

May	Indicates a possible course of action
Should	Indicates a preferred course of action
Shall	Indicates a course of action with a mandatory status

4.4 COMMON ACRONYMS

Set out below are common specific terms presented in alphabetical order:

BAP	Biodiversity Action Plan
CEO	President and Chief Executive Officer
COO	Chief Operating Officer
COP	Conference of the Parties to the United Nations Framework Convention on Climate Change
CSH	Safety, Security, Health and Environment Division
DEA	Decommissioning Environmental Assessment
DMF	Department of Mineral Fuels
EDE	Engineering and Development Group
EIA	Environmental Impact Assessment
EMS	Environmental Management System

EVP	Executive Vice President
FG	Function Group
GHG	Greenhouse Gas
INDC	Intended Nationally Determined Contribution
IPIECA	International Petroleum Industry Environmental Conservation Association
ISO	International Organization for Standardization
KPI	Key Performance Indicator
NORM	Naturally Occurring Radioactive Material
OPS	Operations Support Group
POS	Production Asset and Operations Support Group
PTIT	Petroleum Institute of Thailand
SEMP	Safety and Environmental Management Plan
SSHE	Safety, Security, Health and Environment
SSHE MS	Safety, Security, Health and Environment Management System
SVP	Senior Vice President
UN	United Nation
UNEP	United Nation Environment Programme
UNGC	UN Global Compact
WBCSD	World Business Council for Sustainable Development
WRI	World Resources Institute
WWF	Worldwide Fund for Nature (formerly World Wildlife Fund)

5. ROLES AND RESPONSIBILITIES

5.1 OWNERSHIP OF THE DOCUMENT

The owner of the Environmental Management Standard is SVP, SSHE Division, with responsibilities for:

- Issuing the Environmental Management Standard and its revisions.
- Ensuring effective implementation of the Standard.

5.2 CUSTODIAN OF THE DOCUMENT

The custodian of the Environmental Management Standard is VP, Environment Management Department, with responsibilities for:

- Identifying deficiencies or potential improvements.
- Initiating periodic revision.
- Maintaining revision history and document status register.
- Support the Assets in implementation as per requirements defined in this Standard.

5.3 KEY ROLE AND RESPONSIBILITY

All TOP MANAGEMENT

(President and CEO, COO, all EVPs, and all SVPs)

- Demonstrate SSHE leadership and commitment by ensuring the implementation of environmental issues together with SSHE issues as important as any priorities.
- Ensure that the environmental concern issues related to the new acquired area are included when considering the results of due diligence audit.
- Support in endorsement of environmental objectives and targets to ensure compliance with national, international, and PTT Group requirements.
- Ensure that environmental targets are set and cascaded to the related FGs, Divisions, Departments, and Assets, respectively. This includes the monitoring of the achievement and provision of strategic advice, if needed.

FUNCTION GROUP SSHE (FG SSHE)

(POS SSHE, OPS SSHE, EDE SSHE)

- Advise EVPs and/or Division/Asset SVPs under their responsibilities and communicate with Asset SSHE in establishing the FG, Division, and Asset KPI related to the environmental issues including ensuring the KPI achievement.
- Be a focal point between Environmental Personnel in Environment Management Department, SSHE Division and Asset/Site SSHE to ensure the alignment of implementation of environmental management with the Company SSHE requirements, national regulations, and international standards and provide advice, if needed.

Environmental Personnel
Environmental Personnel in Environment Management Department, SSHE Division has responsibilities to; • Provide advice to ensure the compliance of Department/Asset's environmental management with the laws and regulations, and the Company documents as well as this Standard. • Advise FG SSHE, Asset SSHE, and Country/Asset Environmental Representative in establishing the FG, Division, and Asset environmental KPI, including monitoring their performance and seeking for proper solution, if necessary. Country/Asset Environmental Representative has the responsibilities to; • Provide advice to ensure the compliance of Asset's environmental management with the laws and regulations, and the Company documents as well as this Standard. • Advise Asset personnel, under their respective Asset, to conduct the activities in compliance with laws and regulations, and the Company documents as well as this Standard.

Technical Safety Personnel (Process Safety and Assurance Department, SSHE Division)
• Ensure that the due diligence audit conducted with consideration of all concerned environmental issues, especially the strategy of climate management, water management and biodiversity management. • If necessary, when conducting the due diligence audit, requesting the support from Environmental Personnel, Environment Management Department. • Be a SSHE focal point to advise the engineering personnel/Asset personnel, when conducting the risk assessment for any new/modified projects, for the legally and suitably environmental management.

6. ENVIRONMENTAL MANAGEMENT

To achieve the Company SSHE Vision and Mission, PTTEP aims to become a low carbon and ecological footprint organization as well as moving toward a green technology society. The compliance with the SSHE Policy and general SSHE requirements addressed in the SSHE Management System Manual (11003-STD-SSHE-MNL-000-001-R04) are strictly required. Implementation of the Environmental Management System (EMS) shall be integrated with SSHE Management System (SSHE MS) which means that some environmental requirements would be implemented in conjunction with other SSHE activities e.g. SSHE communication, SSHE organization, emergency management, SSHE MS audit, etc. However some requirements need the specific environmental activities/management as addressed in this Standard.

6.1 STRATEGIC ENVIRONMENTAL TARGET

To achieve the Company strategic plan on the environmental dimension and support the global sustainability goals, PTTEP establishes the environmental targets by considering the compliance with national regulations/commitments, international requirements, and PTT Group requirements.

For the effective climate management, PTTEP supports the global requirement of 2 degree scenario from Paris Agreement (COP21) and Thailand's Intended Nationally Determined Contribution (INDC) by setting the Company-wide targets related to the GHG emission as stated below.

In summary, the Company strategic environmental targets are:

Greenhouse Gas (GHG)		
Short-term Target	20% Emission Intensity Reduction by 2020	(Compared to 2012 base year)
Medium-term Target	25% Emission Intensity Reduction by 2030	(Compared to 2012 base year)
Energy Efficiency	5% Consumption Intensity Reduction by 2020	(Compared to 2012 base year)
Spill	Zero Spill	

In addition, depending on the risk assessment results, there are the targets set at the Country or Asset level i.e.

- Freshwater consumption reduction target has been set for S1 Asset at 5% consumption intensity reduction by 2020 (compared to 2013 base year);
- Zero produced water discharge has been set according to the operational risk in each area, at least the compliance with host country regulations shall adhere to.

  For Thailand operation, zero produced water discharge is a government direction for offshore Assets; however most of onshore Assets comply with this direction; and
- Zero hazardous waste to landfill has been set as a Company-wide target especially Thailand Assets shall adhere to this target. However, depending on the host country regulations and facilities availabilities. This target can exempt in case landfill is the only approved waste disposal method.

The other environmental related targets can be established based on the risk assessment results at any times.

To support the target achievement and the effective environmental implementation, all PTTEP Assets are required to comply with the followings:

- Setting the annual Key Performance Indicator (KPI) at the Asset level as a minimum to support the achievement of the strategic environmental targets; and
- Implementing and achieving the certification of the International Standard: Environmental Management System (ISO 14001).

6.2 ENVIRONMENTAL MANAGEMENT DOCUMENTATION

As per the Company SSHE MS documentation listed in SSHE Intranet, the followings are the summary of the environmental management documents mapping with the 7 SSHE MS Elements:

SSHE MS Elements	Environmental Management Document
1. Leadership and commitment	Refer to SSHE MS document
2. Policy and strategic objectives	Refer to SSHE MS document
3. Organization, resources and documentation	Refer to SSHE MS document
4. Evaluation and risk management	- Environmental Impact Assessment for Exploration and Production Procedure
5. Planning and operational control	- Corporate Spill Contingency plan - Waste Management Procedure - Water Management Guideline - Energy Efficiency Guideline - NORM Management Guideline - Net Environmental Benefit Analysis Guideline - Gas Flaring and Venting Reduction Guideline - Biodiversity and Ecosystem Services Management Guideline - Methane Survey Guideline
6. Implementation and monitoring	- Environmental Baseline Survey and Monitoring Procedure - Environmental Performance Reporting Procedure
7. Audit and review	Refer to SSHE MS document

Note: Refer to document code and their description of each document in SSHE Intranet.

The list of specific environmental activities has been mapped against the PTTEP Project Life Cycles, refer to SSHE Risk Management Standard.

Asset/ Project Life Cycles Phases

	PHASE 1 - IDENTIFY/ ASSESS	PHASE 2 - SELECT	PHASE 3 - DEFINE/ DEVELOP	PHASE 4 - EXECUTE	PHASE 5 - OPERATE/ EVALUATE	PHASE 6 - ABANDON
	Prospect/ Preliminary Studies/ Acquisition Feasibility Studies	Conceptual/ Pre-project/ Pre-FEED	Basic Engineering/ FEED	Detail Engineering Construction/ Installation/ Commissioning	Operation	Decommissioning
Leadership and Commitment	*Refer to SSHE MS Manual*					
Policy and Strategic Objective	• SSHE Due Diligence - Impact valuation (environmental dimension)				- GHG Intensity Reduction Target - Energy Efficiency Target - Spill Target - Freshwater Consumption Target* - Waste Management Target*	
Organization, Resources and Documentation					- Environment Management Documentation *(refer to 6.2 in this Standard)*	
Evaluation and Risk Assessment	- Climate Change Risk Assessment - Water Risk Assessment - Biodiversity Management	-SEMP - EIA - Climate Change Risk Assessment - Water Risk Assessment			- EIA - Climate Change Risk Assessment - Water Risk Assessment - Biodiversity Risk Assessment	- EIA (REA) - Net Environmental Benefit Analysis - Stakeholder Engagement plan
Planning and Operational Control		- Gas Flaring and Venting Philosophy - Energy Efficiency Management		- Spill Management - GHG Management - Water Management - Biodiversity Management - Waste Management	- Spill Management - GHG Management - Water Management - Biodiversity Management - Waste Management - NORM Management - ISO14001 Implementation	- Spill Management - GHG Management - Water Management - Biodiversity Management - Waste Management - NORM Management
Implementation and Monitoring		- Environmental Baseline Survey		- Environmental Baseline Survey - Environmental monitoring - Environmental performance report	- Environmental Baseline Survey - Environmental monitoring - Environmental performance report	- Environmental Baseline Survey - Environmental monitoring - Environmental performance Report
Audit and Review					- EIA Compliance audit - Technical Environmental audit - SSHE MS Audit - ISO14001 EMS audit and review	- EIA/ REA Compliance audit - Environmental Compliance audit - Technical Environmental audit

Note: * Target setting based on the location of Asset and the risk assessment result.

6.3 ENVIRONMENTAL IMPACT MANAGEMENT

Management of environmental impacts arising from Company activities shall be systematically identified and evaluated to maintain its up-to-date since the early phase of company activities throughout the decommissioning phase. The environmental impacts shall be reviewed and updated on a regular basis or when there is the significance changed or new activity occurred. The impact management will assure that all relevant impacts are prioritized, the mitigation measures and monitoring programmes/ environmental management plans are established to prevent and minimize the possible adverse impacts as well as enhancement of the possible beneficial impact.

6.3.1 Impact Assessment Study

The impact assessment study of environmental issues in this Standard covers the followings study as per the exploration and production phase:

(1) the Safety and Environmental Management Plan (SEMP) for seismic activity,

(2) the Environmental Impact Assessment (EIA) Study for exploration and production activity, and

(3) the Decommissioning Environmental Assessment (DEA) Report for decommissioning activity.

The mandatory required that these impact assessment studies shall be granted the approval from the authorities prior to the commencement of any exploration and production activities. The impact assessment study shall be referred to the concept addressed in the SSHE Risk Management Standard (SSHE-106-STD-400), which the tools and detailed criteria may differ based upon the specific environmental issues.

In Thailand, the impact assessment study for seismic activity is legally required as SEMP. Whereas, in some countries, this shall be stringently required as the EIA study or the other similar study, which is subjected to the host country regulation.

For exploration and production phase, the EIA study shall be conducted in compliance with the host country EIA regulations. If the host country regulations does not exist, the EIA study shall be conducted in compliance with the Environmental Impact Assessment for Exploration and Production Procedure (SSHE-106-PDR-401) as a minimum.

When entering into the decommissioning phase, the impact assessment study for decommissioning activity shall be conducted in compliance with the host country decommissioning regulations. For Thailand, this is required as DEA study, whilst in some countries this can be referred to as the EIA for decommissioning activities.

Moreover, the Asset(s), implementing the International Standard: Environmental Management System (ISO 14001) latest version and maintaining the certification to the standard, shall identify and evaluate the environmental aspects and impacts of company activities under scope of the certification in accordance with FG and/or Asset documents.

6.3.2 Climate Strategy Assessment

Besides the environmental impacts identified and evaluated as per 6.3.1 Impact Assessment Study, the climate has been identified as one of the Corporate risk in the Corporate risk profile. This means the Company shall ensure the consideration of climate strategy impact through an integration into the Company-wide risk management process or the specific climate change risk management process. This shall be performed together with the following activities; the enterprise risk (Corporate risk) management process, during due diligence audit and in between the production activity.

When evaluating the new Asset opportunity, the carbon pricing of the host country regulations shall be applied to ensure overall business risks are considered, not only the economic and social risks, but also the environmental risks. Hence during the production activity, the GHG regulations and carbon pricing shall be applied when evaluating the investment of any new GHG managements/reduction project. GHG management regulation is typically defined as emission limit, means of GHG reduction/restriction, carbon tax, and carbon credit. The flaring and venting reduction approach stated in the Gas Flaring and Venting Reduction Guideline (SSHE-106-GDL-527) can be applied for both the design of new Assets and the modification of existing Assets.

The assessment shall be done at once when the new Asset acquired and every 5 years for the routine assessment to ensure that mitigation measures/actions are sufficient to manage climate change situation.

6.3.3 Water Risk Assessment

Water is becoming a scarcity resources, which may be affected from water extraction for operation ourselves and/or climate change. Water risk has also been identified as one of the Corporate risk in the Corporate risk profile, which its significance depends on the Asset location. PTTEP water risk tool is customized, by integration of third party tools include WBCSD/IPIECA Global Water Tool, WRI Aqueduct Water Risk Atlas and WWF Water Risk Filter to determine whether the Assets exposed to the water-stressed area, or are in the physical risk area, or affected by regulation change and pricing structure. The water risk assessment shall be done at a country and corporate level. The risk parameters and scenario shall be determined prior to the assessment. Risk parameters include, but not limited to, operational situation, regulatory change, pricing structure, community, reputation (stakeholder conflict), supply chain and physical risks.

Similar to the climate strategy assessment, the water-related risk assessment shall be done at once when the new Asset acquired and every 5 years for the routine assessment to assure that the water stress and other risks involved remain unchanged. However, the Asset(s) within the high water-stressed areas shall be reviewed its situation every year. Refer to the Water Management Guideline (SSHE-106-GDL-523) for more details as well as recommended water management system.

6.3.4 Biodiversity Risk Assessment

Biodiversity is one of vital environmental risks that may consider to be a Corporate risk in the Corporate risk profile. Normally biodiversity impact assessment shall be primarily conducted along with the EIA study. However, any Asset(s) which are particularly located in the sensitive/protected area, the comprehensive biodiversity impact assessment shall be conducted to further determine the

mitigation measures and monitoring programme. The Asset with high risk, shall develop the Biodiversity Action Plan (BAP). In case of the location expansion, the re-assessment of biodiversity impact shall be done to re-assure the risk level and action plans. Refer to Biodiversity and Ecosystem Services Management Guideline (12002-GDL-SSHE-522-008-R01).

In addition to the above risk assessment, Net Environmental Benefit Analysis will help support the Company as a tool to provide the detailed analysis to select the Best Practicable Environmental Options for decommissioning techniques as well as evaluation of the net environmental benefit for spill management. Refer to Net Environmental Benefit Analysis Guideline (SSHE-106-GDL-526).

6.4 PLANNING AND OPERATIONAL CONTROL

The results of environmental impact assessment studies are considered to become the starting point of planning process, including developing the emergency management and the operational control for the critical environmental related issues.

6.4.1 Spill Management

Spill incident scenario shall be included in the Company emergency and crisis management document. To be aligned with 3-Tier response level, each Asset shall developed their own emergency response plan to align with the emergency and crisis management document. The spill response and management plan shall be tested at least annually to check the readiness of the available resources and to ensure that the Company and the Asset plan are effective and efficient to handle the incident situation at all levels. The test shall be done via drills and exercises at Asset and Corporate levels. Besides the test for the operational/tactical response at the location, the communication channel both internal (between Asset and Corporate levels) and external (between Corporate level and the external parties) are one of the crucial issues. In addition, the Environmental personnel in Environment Management Department, SSHE Division will conduct the spill capability review to determine the readiness and completeness of the documentation and resources availability. Refer to Corporate Spill Contingency Plan (12002-PDR-SSHE-503-005-R01) for more details.

6.4.2 Environmental Control Management

By integrating the results of environmental risk assessment, mitigation measures and monitoring programmes/environmental management plans, the planning and operational control shall be developed in terms of setting objective/target and SSHE plan and the operational control document either at the Corporate or the Asset level to be aligned with at least the regulation of host country and international regulations/standard if applicable.

All Assets shall develop the operational control procedures to be aligned with the SSHE Division Standard and Procedure. The Asset may use the SSHE Division Guideline as a guidance in developing their own procedure for the specific environmental management. PTTEP environmental management documentation under the operational control are listed as follows:

- Waste Management Procedure (SSHE-106-PDR-521)
- Water Management Guideline (SSHE-106-GDL-523)

- Energy Efficiency Guideline (SSHE-106-GDL-524)
- Naturally Occurring Radioactive Material (NORM) Management Guideline (SSHE-106-GDL-540/12)
- Gas Flaring and Venting Reduction Guideline (SSHE-106-GDL-527)
- Biodiversity and Ecosystem Services Management Guideline (12002-GDL-SSHE-522-008-R01)
- Methane Survey Guideline (12146-GDL-SSHE-529-014-R00)

6.5 IMPLEMENTATION AND MONITORING

All Assets shall have a full responsibility for implementing the environmental management, the mitigation measures and the environmental monitoring as per the Company requirements and the regulation requirements, including the commitments made with the relevant organizations. The advice from environmental personnel in Environment Management Department, SSHE Division can be requested as necessary. The requirements of environmental monitoring can be seen in the Environmental Baseline Survey and Monitoring Procedure (SSHE-106-PDR-611).

Once conducting the implementation and the monitoring, the results and its performance of each Asset shall be reported to the Environment Management Department, SSHE Division on a regular basis as per the regulations and the Company requirements. The environmental performance are subject to verify by the internal and external parties to ensure the correctness and transparency of the performance being reported. The verified environmental performance data are required to disclose subject to the parties and the government agencies requirements. See details of the required environmental performance data and the reporting procedure in the Environmental Performance Reporting Procedure (12002-PDR-SSHE-612-003-R02).

When entering the decommissioning phase, the Asset shall ensure that the existing environmental monitoring data gathering from the production phase are sufficient and covered all the area to be decommissioned for using as the baseline data, if not the environmental baseline data survey may be conducted prior to EIA/DEA study for decommissioning phase.

After completion of the decommissioning activities, the environmental monitoring shall be conducted once within a month after its completion and on a regular basis as per approved frequency with the government authorities. The monitoring results and the performance report shall be recorded and reported to the government authorities to ensure that no negative impact from the decommissioning activities.

6.6 AUDIT AND REVIEW

Besides SSHE MS audit, Environmental Management Department, SSHE Division shall conduct the specific environmental audit on a regular basis as per an annual SSHE audit plan i.e. EIA internal compliance audit and upon request e.g. waste management audit, EMS internal audit, etc. The audit preparation and the qualification of internal auditor shall be complied with the Audit and Review Standard (SSHE-106-STD-700). The Environmental Management Department, SSHE Division may

conduct or request the Assets to conduct the unplanned audit related to the particular environmental issues which accidentally occurring during the year.

The external audit from the government authorities and relevant external parties may be conducted upon request e.g. HSE audit and waste management audit by Departmental of Mineral Fuels, internal SSHE data verification by PTT Group, SSHE performance data verification by certified bodies, and etc.

The Assets implementing the ISO 14001 Environmental Management System shall have an internal review process to ensure the effectiveness and the up-to-date of Environmental Management System implementation procedure. As per Asset plan, the internal audit shall be conducted by the independent internal auditor. The audit conducted by the external certified bodies shall be performed once every year for the surveillance audit and as scheduled for the certification audit. Refer to the FG and/or Asset document for the ISO 14001 audit requirements.

During and upon completion of the decommissioning activities, the environmental compliance audit shall be conducted subject to the regulation requirements.

Drilling SSHE Management System Application

DOCUMENT NO: DL-DSS-101

REVISION 1

DOCUMENT CONTROL

Custodian	VP Drilling
Document type	Management System Application Guidelines
Uncontrolled Distribution	All technical personnel in Drilling Selected Drilling Contractors

Date	Revision	Sections	Reason for change
14 Dec 11	1	All	Final Document.
13 Dec 11	A3	9 -10	Include SSHE Plan template and Corporate Document Reference.
01 Nov 11	A2	All	Expanded on implementation and include section 8.
22 August 11	A	All	Complete draft for review.

Prepared by	Reviewed by		Endorsed by			Approved by	
	Colin Mearns	Leendert Van Zanten	Keittipong Kaotun	Pattanapong Thirayutnimo	Chayong Boriswihagul	Somchai Manopinives	Prisdapunt Pojanapreecha
Steve Oliver EDL	[redacted]						

This document shall be maintained live on the PTTEP Drilling intranet site. This web-based document is the controlled version and revision announcements will be distributed via e-Mail to relevant parties and published on the Web. Copies or extracts of this manual, which have been downloaded from the website, are uncontrolled copies and cannot be guaranteed to be the latest version. The person using the hard copy is responsible for ensuring they are using the latest version.

This document has a maximum validity of two years after the last revision date. Within this period the document must be assessed for relevance, updated as required and revalidated.

Suggestions for further improvement in this document should be sent to the Document Custodian.

This document is the property of PTTEP. It must not be stored, reproduced or disclosed to others without written authorization from the Company.

TABLE OF CONTENTS

Document Control 2
Table of Contents 3
Section 1 leadership and commitment 7
Section 2 policy &strategic objectives 8
Section 3 Organization, Resources AND DOCUMENTATION 9
3.1 Responsibilities 9
3.2 Company and Contractor & Sub Contractor Interfaces 11
3.3 Training Awareness and Competence 11
3.4 Contractors 11
3.5 Communication 12
3.6 Consultation 12
3.7 Documentation 12
3.8 Drilling SSHE Management Documentation Structure 13
Section 4 evaluation and risk management 14
4.1 Definition 14
4.2 Work planning and control 14
4.3 Recording hazards and effects 14
4.4 Objective and Performance Criteria 15
4.5 Risk Reduction Measures 15
Section 5 implementation and operational control 16
5.1 Management of Change 16
5.2 Client & Contractor Interface 16
5.3 Predictive and Preventative Maintenance 16
5.4 Contract and Purchasing 16
5.5 Emergency Response Preparation 16
Section 6 Monitoring and measurement 18
6.1 Implementing Activities and Tasks 18
6.2 Monitoring 18
6.2.1 Active Monitoring 18
6.2.2 Reactive Monitoring 19
6.2.3 KPI's 19
6.2.4 Records 20
6.3 Non Compliance and Corrective Action 20
Section 7 audit and review 21
7.1 SSHE DMS Auditing 21
7.2 Audit Preparation 22
7.3 Audit Execution 22
7.4 Audit Reporting and Follow Up 22
Section 8 Effective implementation 23
Section 9 SSHE Plan and kpi's 26
9.1 SSHE Plan Template 27
Section 10 Corporate SSHE MS References 28
10.1 Standards 28
10.2 Procedures 28
10.3 Guidelines 29
10.4 Useful Links 29

This document is the property of PTTEP. It must not be stored, reproduced or disclosed to others without written authorization from the Company.

Document Overview

Purpose

The purpose of the SSHE Drilling SSHE Management System (SSHE DMS) is to clearly define the organisation, application and arrangements in place to ensure the health, safety and welfare of the workforce and to minimize the environment impact. The organisation description details the health, safety and environment roles and responsibilities of individuals and teams within PTTEP Drilling Department and its contractors & sub-contractors.

The concept behind the SSHE DMS is to create a positive safety culture, involving participation at all levels, while adopting a systematic approach to policy implementation. Fundamental to this approach is an ethic which encourages open thinking and clarity of understanding of roles and responsibilities. The principles by which this is achieved are

- Teamwork and networking
- Employee involvement and empowerment (those closest to the work are in the best position to identify and implement improvements).
- Informed decision-making through performance measurement
  Continuous Improvement

Scope

The SSHE DMS applies to all activities undertaken in connection with PTTEP Drilling Operations.

Objectives

The PTTEP SSHE DMS primary objectives:

- To safely manage, maintain and operate all facilities and equipment under its control
- To apply safe systems of work, within a safe place of work, in a consistent manner at all locations under its control or other locations where its employees are required to work.
- To have in place the necessary measures and controls which will minimise the impact of its activities on persons' health and the environment.
- To provide at all levels, through appropriate training, familiarisation and refresher training where necessary, a competent and fully trained workforce.

In addition to the above primary objectives, a number of secondary objectives are:

- To establish performance standards in all areas of operations as an industry leader
- To delegate responsibility through line management for the active management of SSHE Affairs
- To provide line management with competent advice and support to assist them in achieving the performance standards required.
- To provide an effective system of communication up, down and across the PTTEP Drilling organisation, linking with contractors & sub-contractors to ensure active participation of SSHE affairs.
- To reduce or eliminate accidents and incidents, but should they occur, conduct thorough follow-up investigation and incident analysis for future accident prevention measures.
- In conjunction with contractors & sub-contractors, continue to improve emergency plans by maintaining preparedness and undertaking training and so response can be immediate and effective.
- To have in place the inspection and auditing programmes for full and effective monitoring of the SSHE DMS and the means for continuous improvement.

Format

The PTTEP SSHE DMS is developed in line with the Corporate SSHE MS (Figure 1) and in such a format that the structure, linking and auditing systems are directly appropriate to all drilling operations, and interfacing with all contractors's HSE MS is easily achieved

The SSHE DMS allows the PTTEP Drilling Department to demonstrate that it has:

- Established a Drilling SSHE Management system to eliminate or minimize risk to employees and other interested parties who may be exposed to risks associated with its activities
- Has implemented, maintains and continually improves its SSHE Management System
- Assured itself of its conformance with the corporate published SSHE MS Policy
- Can demonstrate its conformance to country requirements as required

Figure 1

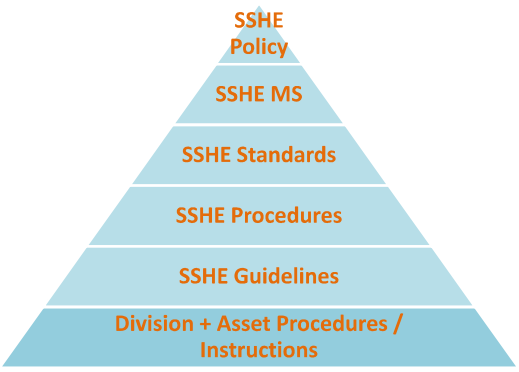

The SSHE Management System, which is headed by the SSHE policy sets mandatory standards, procedures and guidelines which have been used in the preparation of the Drilling SMS.

Preparation

The SSHE DMS has been prepared by examining the activities undertaken by PTTEP Drilling Department for each activity the processes (systems and procedures) necessary to secure the health and safety of the workforce and the environment impacts were identified. These processes have been grouped into elements to support the Corporate PTTEP SSHE MS 7 elements:

PTTEP SSHE MS	Addressing
1) Leadership and Commitment	Top-down commitment and SSHE culture, essential to the success of the SSHE MS.
2) Policy and Strategic Objectives	Corporate or Department intentions, principles of action and aspirations with respect to SSHE
3) Organization, Resources and Documentation	Organization of people, resources and documentation for sound SSHE performance
4) Evaluation and Risk Management	Identification and evaluation of SSHE risks, for activities, products and services, and development of risk reduction measures
5) Implementation and Operational Control	Implementation and control of work activities, including planning for changes and emergency response
6) Monitoring and Measurement	Monitoring and measuring of activities performance, and how corrective action is to be taken when necessary
7) Audit and Review	Periodic assessments of SSHE MS performance, effectiveness and fundamental suitability

Contract Specific SSHE Plans and other contract safety documentation (i.e. Controls, Materials Management, and Safety Philosophy) will be developed through close liaison and close co-operation with contractors & sub-contractors. Each SSHE Plan will be developed specifically to meet contract SSHE needs.

SECTION 1 LEADERSHIP AND COMMITMENT

Effective implementation of the Drilling SSHE MS requires strong and visible leadership and active commitment from management and all Supervisory level alike.

PTTEP Drilling Managers and all Supervisory levels will demonstrate active leadership and commitment by ensuring that adequate resources are made available for the implementation of this SSHE DMS. In addition, they will promote leadership and commitment through active participation in SSHE and demonstrating:

Belief in the organisation's commitment to continually improve SSHE performance and that safety is priority in all tasks.

Motivation to improve personal SSHE performance based on awareness and understanding, acceptance of individual responsibility and positive recognition of a desirable attitude and behaviour.

Participation of personnel at all levels through canvassing their views and involvement in SSHE development, and energetically pursuing improvement suggestions.

Commitment of personnel at all levels as a pre-requisite for SSHE management

Demonstration of commitment by PTTEP Managers and all Supervisory level includes:

- full understanding of the SSHE Policy and requirements of the SSHE Directives;
- goal and KPI setting by senior management;
- allocating necessary resources to SSHE matters;
- setting a personal example;
- being actively involved in SSHE activities and reviews at all locations;
- communicating the importance of SSHE considerations in all business decisions;
- recognising the achievement of SSHE objectives;
- encouraging suggestions from personnel for ways to improve SSHE performance;
- participation in SSHE initiatives;

SECTION 2 POLICY &STRATEGIC OBJECTIVES

The following strategic objectives are long-term goals, which have been developed from the Corporate SSHE Policy statements.

- Comply with all applicable SSHE laws and regulations in all operations worldwide.
- Ensure that all employee, contractors and business partners are aware that they are accountable for SSHE performance while conducting their business activities.
- Recognize and eliminate potential hazards where possible, and safely manage those hazards that cannot be eliminated.
- Persistently endeavour to manage SSHE risks through emergency preparedness, contingency planning, response and recovery programs and training of personnel in behavioural-based safety programs and SSHE compliance.
- Strive to improve SSHE performance results with a management system designed to establish targets and assess performance.
- Encourage open communication throughout the organisation, within local communities and with relevant applicable regulatory agencies on SSHE issues.

The drilling department and contractors SSHE plans shall be developed to ensure that the company SSHE Policy is achieved. The Plan as a minimum shall cover objectives and targets, activities, SSHE Improvement Plans and KPI's.

Each department and installation shall ensure that a system is in place to effectively communicate the SSHE Policy to all employees and contractors so that all are aware of SSHE Expectations and understand their roles and responsibilities in achieving them.

The PTTEP Company SSHE Policy shall be displayed in prominent places on all installations and office spaces under PTTEP operations and if required translated in to dual language.

SECTION 3 ORGANIZATION, RESOURCES AND DOCUMENTATION

3.1 RESPONSIBILITIES

The responsibility for the effective implementation of the PTTEP SSHE DMS lies directly and personally with the VP Drilling. In practice, the responsibility of managing safety is delegated through line management to personnel at each place of work. The organisational structure ensures that this delegation is clearly defined and traceable at each level throughout the PTTEP Drilling organisation. It is the responsibility of the appropriate line manager to ensure that the PTTEP SSHE DMS, in particular the procedures relative to their own activity within the organisation, are communicated, understood, applied effectively by the workforce. In particular that each employee must understand that he is the "supervisor" of his own safety, and the safety of his co-workers.

The drilling department organisational structure is below (Figure 2) although is subject to constant review and may change subject to operational requirements:

Figure 2

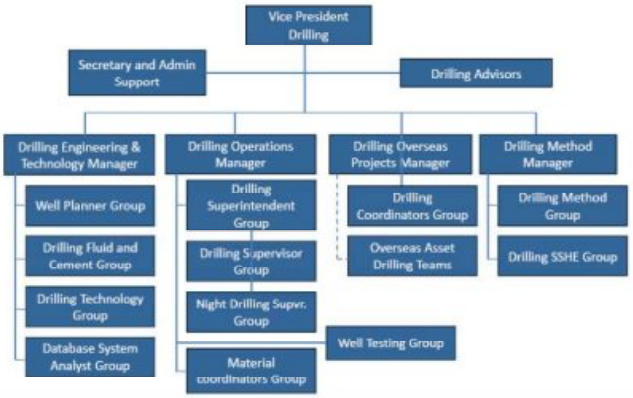

VP Drilling

The VP Drilling has ultimate overall responsibility for SSHE matters within PTTEP Drilling Operations.

Line Managers

Line Managers are responsible for all SSHE matters within the scope of their activities. These include:

- Assigning accountabilities to all Supervisory level and others with direct responsibility for SSHE issues.
- Providing a budget for implementation of SSHE activities
- Providing support and encouraging a culture of commitment to SSHE activities
- Obtaining specific monthly accident/incident reports and giving presentations on SSHE issues for which they have control.
- Providing input to the contract specific SSHE plans and personal intervention when the performance standards are not being met.
- Making specific SSHE visits to all contract sites and locations regularly, in order to personally assess levels of performance (in terms of management standards and compliance with procedures), and to give commendation where merited.
- Ongoing assessment of each individual manager's and supervisor's achievements against SSHE objectives and formal annual review.

Line Managers & All Supervisory level

The responsibilities of Line Managers & All Supervisory level include:

- Ensuring conformance to the SSHE DMS performance standards for all operations in their area of responsibility. Ensuring that the SSHE DMS and supporting documentation is clearly understood, maintained and not compromised by employees under their control.
- Providing employees with sufficient information, training, instruction and equipment to ensure personal safety in all aspects of their work
- Ensuring that all accidents, incidents and near miss events are reported, fully documented, thoroughly investigated, and that the necessary corrective measures are taken to prevent recurrence.
- Showing personal commitment by making SSHE visits to all departments, contract or work areas under their control.
- All policies and procedures reflect the requirements of all applicable legislation
- Regular technical safety audits are carried out in compliance with the SSHE DMS and Contract Specific SSHE Plan, if applicable. .
- Safety training programmes are developed in conjunction with Managers for all employees, setting the standards of training to be applied. Safety training courses are compiled and co-ordinated (e.g. Emergency Response)

Employees (direct employees, contracted employees , contractors & sub-contractors)

The responsibilities of all employees include:

- Understanding the requirements of the PTTEP SSHE DMS and its supporting documents and ensuring its implementation throughout the operation.
- Bringing to the attention of line managers any hazards or potential hazards they become aware of in all areas of their activity and any failures to comply with the requirements above.
- To attend safety meetings and give details of safety performance.
- Report promptly all accidents and incidents to their supervisors.
- Take care of their personal health and safety, and by their actions help to ensure the safety of others.
- Actively participate in all safety behavioural programs and campaigns.

3.2 COMPANY AND CONTRACTOR & SUB CONTRACTOR INTERFACES

The SSHE DMS recognises that contractors may have specific requirements which need to be addressed within the Contract Specific SSHE Plan. Similarly, contractors need to relate their management of safety to that of PTTEP, to ensure consistency of standards and approach in the workplace. This would be in the form of the SSHE DMS Bridging Document

PTTEP assesses the SSHE MS of potential contractors to verify compatibility and acceptability of the various elements (responsibilities, performance standards, procedures etc) and develops the Contract Specific SSHE Plan as well as the interface 'bridging' document. Any additional procedures are added as required.

The development of a Contract Specific HS&E plan is therefore undertaken in full consultation with the contractors so all reporting and operational interfaces are recognised and documented prior to commencing operations.

The sub-contractors must comply with requirements of the contractor's SSHE MS to ensure consistency of standards and approach in the workplace.

3.3 TRAINING AWARENESS AND COMPETENCE

Training is an important part of ensuring that new recruits, contractors and staff assigned to new tasks, procedures and equipment understand their SSHE roles and responsibilities clearly, and retain the required competencies to work effectively and safely.
Personnel are to be selected on a basis of competence (personal abilities, skills, experience and acquired knowledge) to perform the tasks for which they have been employed or assigned. Continued competence is to be ensured through routine measurement of personnel performance against defined competency criteria and personal SMART objectives and targets. The results of this measurement are to be used to assess the need for training and personal development. A training matrix should be documented and should identify the occupation, training requirement, regulations (if applicable), and frequency of training required for company personnel.
Training should be aimed at ensuring that all employees understand the SSHE Policies and SSHE DMS and are able to make a positive contribution to good SSHE performance and performance improvement.

Job-specific SSHE training must also be carried out for employees and contractor staff exposed to work related HSE hazards before they start work. This should include training on the risks associated with their job of work, the risk control measures in place and their responsibilities to apply them.

Training for managers should be aimed at ensuring they understand the SSHE DMS, have the knowledge necessary to effectively carry out their responsibilities, and are aware of the standards by which its effectiveness will be monitored

3.4 CONTRACTORS

All Assets and Management Support are to ensure that contractors operate a management system that is consistent with the requirements of the PTTEP SSHE DMS. Interfaces between this system and contractors' systems must be considered so that any differences and conflicts may be resolved. Particular attention should be given to the following:

- assessment of contractors HSE Policy, practices and performance, and the adequacy of their management system to deal with the risks associated with the services to be provided;
- effective communication of the key elements of this SSHE management system, and the standards of competence and environmental protection expected from the contractor, including the agreed performance standards to be achieved;
- ensuring that the contract SSHE arrangements agreed are being implemented and that the work is completed with all SSHE specifications accomplished.
- sharing with contractors relevant information which may influence joint SSHE performance;
- the requirement that contractors have appropriate training programs and training needs assessment procedures;

- defining how contractor achievement of agreed SSHE objectives and performance standards will be monitored and assessed;
- how emergency plans will be communicated and the role that contractors play in these;
- the communication of hazards and risks and the role of the contractor in risk management;
- management of interfaces between the contractor and PTTEP Drilling department

3.5 COMMUNICATION

PTTEP Managers and All Supervisory level are to promote awareness and understanding of the importance of managing SSHE issues through communication between management, employees, contractors, sub-contractors and suppliers. This will include:

- emphasizing the importance of compliance with the SSHE Policy and objectives;
- understanding company and legislative requirements;
- providing employees with the information needed to perform their jobs effectively;
- ensuring all personnel are aware of the strategic objectives;
- ensuring all personnel are aware of and understand the emergency response procedures that are in place;
- ensuring that the potential consequences of deviating from agreed standards and procedures are known;
- making known the mechanisms for personnel to make suggestions for SSHE performance improvement;
- ensuring that employees , contractors, sub-contractors are aware of changes to organisation, responsibilities, work practices, procedures, standards and company practices that may affect the work that they do;
- keeping employees and contractors, sub-contractors informed about company performance and achievements.

Communication on SSHE issues will be integrated into all forums of communication including:

- Management Meetings - these include regular management progress meetings and include reports on the SSHE improvement programs in place and SSHE performance;
- Task-related Meetings - these range from individual job briefings and team meetings to toolbox talks (pre-work meeting) , providing opportunities to discuss SSHE issues in advance of undertaking particular tasks;
- Safety Meetings - routine safety meetings are held at operational locations to promote SSHE programs and standards to manage risks. In addition, specific safety meetings may be held before the start of a new project or new activity.
- At the daily operation meeting, SSHE suggestions cards will be reviewed and actions will be made.

3.6 CONSULTATION

Participation and involvement in SSHE activities at all levels in the organisation is essential to achieve effective risk control and good SSHE performance. Consultation encourages ownership of and commitment to the SSHE Policies, objectives and issues at all levels and promotes effective SSHE management.

As per Gulf of Thailand Regulations and PTTEP procedures Environmental and Safety Committees are to be appointed and used as a means for actively encouraging and supporting consultation and promoting SSHE across all levels of the organization.

3.7 DOCUMENTATION

The following controlling documents shall be available on each installation in hard copy for reference:

- Drilling Management System Description
- Drilling SSHE Management System Overview & Application (This Document)
- Well Control Manual

- Blow Out Contingency Plan
- Emergency Response Plan
- Bridging Interface Document

Other relevant SMS Documents and Installation specific plans & procedures shall be made available on CD format. This list of documents in CD format shall be maintained by EDL SSHE Department and updated and sent to all drilling operations as required.

In addition PTTEP Drilling department has developed a brief documented overview of their SSHE DMS (Safety Handbook). This document provides a brief overview, direction (cross-references) to applicable standards, codes of practice, guidelines, procedures and other relevant documentation in the SSHE DMS.

This Safety Handbook is provided to all PTTEP Drilling Supervisors and Engineers for ease of reference. It is maintained and updated by PTTEP Drilling SSHE department as required.

3.8 DRILLING SSHE MANAGEMENT DOCUMENTATION STRUCTURE

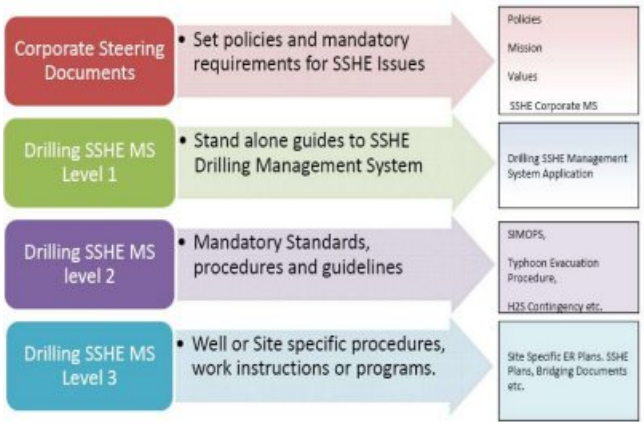

SECTION 4 EVALUATION AND RISK MANAGEMENT

It is important that risks are managed in an acceptable level and risk assessments shall be conducted for all areas and tasks performed on all of PTTEP sites.

4.1 DEFINITION

Hazard- The potential to cause harm, including ill health or injury, damage to property, or plant, products, production losses, increased liabilities, or the environment.

Risk- The likelihood that a given level of harm from a particular hazard will be realised.

Risk Assessment

Risk Assessment involves the consideration of both the severity of the effects (Or consequences) of an identified hazard and the probability of its occurance. It is mathematically defined as:

Risk = likelihood of occurrence x Severity of consequences

Certain activities or facilities may have major hazard potential, which if realised could result in a major incident. In these cases a formal comprehensive, formal and where appropriate a quantified method of risk assessment will be conducted. Quantified risk assessment which expresses the risk numerically is used for high risk situations, and to assist in the comparison of design options and risk control measures to achieve optimum solutions to reduce the risk to ALARP.

The assessment of environmental risks is to be performed by a formal environmental impact assessment process.

The PTTEP procedure establishes the methodology to identify hazards and to evaluate the inherent risks to the health and the safety for the people and the facilities, which can arise during exploration and production. The process establishes and evaluates the hazards arising from activities undertaken and considers the probability and consequence of the occurrence of an event.

Personnel in charge of each operative Area with the support of the SSHE department are responsible for identifying the hazards and the evaluation of risks.

4.2 WORK PLANNING AND CONTROL

A comprehensive Permit To Work system (PTW) shall be used at all locations for control of all activities to ensure control of work areas or scopes and control of simultaneous operations (SIMOPS)

Prior to the issuing of any PTW a Task Based Risk Assessment (TBRA) or Job Safety Analysis (JSA) shall be carried out and documented. The PTW system shall be subject to internal audits as well as PTTEP external audits as required.

4.3 RECORDING HAZARDS AND EFFECTS

Efficient use of the risk assessment process is essential to ensure all activity risks have been identified and mitigation measures put in place. The assessment should be conducted involving all members involved in the task. Effective communication is the key to a successful TBRA process thus all members involved in the activity should sign the assessment to show they understand the hazards and barriers to be put in place. The assessment is a live document and should be reviewed if any changes to activity or circumstances.

Following the completion of the task the assessment should be subject to a further review to see what mitigation was effective and if any learning's to be gained for future similar activities. The identified hazards, effects and mitigation from the risk assessment process are recorded in various forms:

- Job Safety Analysis or Task Based Risk Assessments
- HAZOP Reports
- HAZID Reports
- Through HSE Cases (If Required)
- EIA Reports
- Master Risk Assessment Reports

4.4 OBJECTIVE AND PERFORMANCE CRITERIA

To ensure that risks are effectively managed, objectives, SSHE Plans, KPI's, targets and performance monitoring shall be established and implemented on an annual basis and be subject to constant review by EDL SSHE department.

4.5 RISK REDUCTION MEASURES

In the event that the level of risk is unacceptable additional risk reduction measures are required to ensure that risks are reduced to ALARP. No activity may take place unless further risk reduction measures are implemented.

SECTION 5 IMPLEMENTATION AND OPERATIONAL CONTROL

Planning and operational control covers all routine, non-routine and emergency situations involving planning for ongoing operations, managing changes and developing contingency and emergency response procedures.

All installations and departments are responsible to ensure that procedures and site specific work instructions are available and understood by all concerned employees and contractors.

5.1 MANAGEMENT OF CHANGE

Changes in the organisation, management, personnel, equipment, processes and procedures of an activity have the potential to create adverse consequences to SSHE performance and/or affect the existing risk assessment results.
The Management of Change process is therefore critical for ensuring that any changes to the original concept, design, equipment, assumptions, codes, standards, processes, or SSHE Management System aspects (e.g. legislation, organisational structure, responsibilities) are recorded and fully assessed for their impact **prior** to the change being implemented.
Planning of changes needs to address SSHE implications at all stages of the change process to ensure that hazards, effects and risks are identified, assessed and demonstrated to be ALARP. Changes must be communicated to those whose work activities are affected.

5.2 CLIENT & CONTRACTOR INTERFACE

A SSHE bridging document will be developed between the PTTEP Drilling department and each HSE MS of the contractors involved the operation.

This bridging document will be used as main reference for duration of the operation. The bridging document will require review periodically and following rig moves or changes in operations. The bridging document shall be agreed and signed by both PTTEP and Contractor.

5.3 PREDICTIVE AND PREVENTATIVE MAINTENANCE

A program for maintenance and technical inspections is established to ensure that all equipment and facilities are in a safe operating condition.

This program includes safety and environmental equipment for emergency and pollution control to assure operability in emergency situations.

5.4 CONTRACT AND PURCHASING

Each element of the PTTEP DMS is used in the process of selecting suppliers and must take into account SSHE requirements and statutory aspects relating to the suppliers, products and equipment.

5.5 EMERGENCY RESPONSE PREPARATION

All operational sites must have an emergency response plan for personal, industrial and environmental accidents or natural disasters, these plans will include:

- Scenarios and evaluation of foreseeable accidents.
- Internal and external means of response available.
- Specific plans of action and communication
- Activities for implementing and maintaining the plan

This document is the property of PTTEP. It must not be stored, reproduced or disclosed to others without written authorization from the Company.

It is essential that emergency response plans and procedures are tested regularly thus each installation shall have a documented schedule for drills and exercises and any deficiencies or areas of weaknesses are recorded, communicated and closed out effectively to ensure and maintain emergency response readiness.

This document is the property of PTTEP. It must not be stored, reproduced or disclosed to others without written authorization from the Company.

SECTION 6 MONITORING AND MEASUREMENT

6.1 IMPLEMENTING ACTIVITIES AND TASKS

Activities and tasks are to be conducted according to the procedures and work instructions prepared at the planning stage or at an earlier stage during the application of the management system. The procedures and work instructions are to be continuously monitored for deficiencies and updated to ensure continuous improvement in SSHE performance.
The conduct of activities and tasks according to relevant procedures is the responsibility of line managers all levels in the organisation. This responsibility also includes ensuring that SSHE objectives are met, that performance standards are attained and that control limits are not exceeded.

Employees and contractor staff who are exposed to work related hazards are to be made fully aware of the risks, the risk control measures in place and their responsibilities to apply them. Safe systems of work incorporating a permit to work system are to be implemented to control all aspects of potentially hazardous work. Training programs are to be implemented to ensure that all employees and contractor staff are familiar with all relevant procedures and instructions before they start work.

6.2 MONITORING

SSHE performance is to be measured against objectives, targets and performance standards set by PTTEP Corporate and PTTEP Drilling department, and for the purpose of benchmarking against industry standards. Key areas for benchmarking are, for example, HSE Incident statistics, non-conformance and prohibition notices, competency and training programmes, HSE management systems, organisational structure and defined roles and responsibilities. Improvements and corrective actions are to be identified and put into effect to ensure that continuous performance improvement can be achieved.

Monitoring should be preferably proactive rather than reactive as it provides preventative information for SSHE issues. Monitoring may be informal and continuous or formal and discrete. Reactive monitoring provides information after the event and therefore will be more costly to rectify. However, lessons learned provide a useful tool to prevent recurrence.

6.2.1 Active Monitoring

Active Monitoring Includes:

- regular monitoring of progress in achieving objectives and targets;
- performance profiling against defined criteria;
- periodic inspection and testing of facilities, protection systems and equipment against their assigned performance standards (the verification scheme for example);
- periodic examination of documented procedures, work instructions and practices to check that SSHE standards are being complied with;
- periodic examination of document records and audit trails;
- observation of work practices and the behaviour of first line supervisors to assess compliance with safe systems of work;
- observation of the application of SSHE work procedures, standards and practices to assess compliance with legislative and company HSE Policy
- regular evaluation of discharges, emissions and waste disposal;
- health assessment and health surveillance of personnel and, where needed, exposure monitoring.

This document is the property of PTTEP. It must not be stored, reproduced or disclosed to others without written authorization from the Company.

6.2.2 Reactive Monitoring

Reactive monitoring requires the investigation, recording, analysis and corrective action for:

- injuries resulting from accidents;
- medical emergencies and evacuations;
- other loss events such as asset or environmental damage;
- incidents including near misses;
- previously unidentified hazards and effects;
- changes that have been missed;
- weaknesses or omissions in performance standards;
- cases of non-compliance.

Data collected by reactive monitoring is to be evaluated, recorded and analysed so that adverse trends (increasing LTIF for example) can be identified and appropriate action taken.

6.2.3 KPI's

Key Performance Indicators are used as a measurement of SSHE performance and as reference of benchmarking process with other similar organization. PTTEP Drilling department will identify KPI's ensuring these are aligned with corporate key performance indicators.

Examples of KPI's that can be used for measurement are listed below the Drilling KPI's shall be identified in the SSHE Plan.

Leading Indicators	Lagging Indicators
• Number of SSHE audits carried out • Number of training hours expended • Number of Method Statements available • Number of Task Risk Assessments carried out • Number of site inductions carried out • Refresher training courses • Number of Tool Box Talks • % completion of actions from audits , incident investigations and hazard observations • % completion of actions from project design HSE reviews and HAZOP's • % completion of training in accordance with the training matrix • Vehicle checks carried out (including cranes and trucks) • Work Site Noise Surveys • Number of ergonomics and illumination surveys • Assessments of exposure to hazardous substances	• Number and frequency rate of near misses • Number and frequency of chemical and oil spills • Quantity of waste produced • Environmental emissions (results of monitoring) • Number of hazards observed • Cost of property damage • Number and frequency of injuries

This document is the property of PTTEP. It must not be stored, reproduced or disclosed to others without written authorization from the Company.

6.2.4 Records

Records are required to provide evidence of the operation of the SSHE DMS and demonstrate the extent of compliance with the Health, Safety, Environmental Policy and strategic objectives, targets and performance standards.

Records are to include:

- reports of reviews, studies and investigations including any recommendations, actions and their status (Safety Action Records);
- situations of non-compliance and details of any notices served by regulatory authority, and the improvement actions to correct these non-compliance's;
- details of accidents and incidents with follow up and lessons learned actions;
- information concerning contractors' and suppliers' SSHE performance;
- reports of assessments, inspections and tests including emergency response exercises;
- composition, properties and hazards of chemical substances;
- personnel development and training records;
- safety critical elements, performance standards and schemes of verification;
- construction notices and operating consents; safety cases (If required), environmental impact studies and their supporting reports;
- information on applicable environmental laws or other specific requirements;
- written complaints;
- audit results and follow up actions;
- management reviews.

6.3 NON COMPLIANCE AND CORRECTIVE ACTION

All non-compliances with SSHE requirements or the operation of SSHE DMS will be investigated and appropriate corrective actions identified, initiated and tracked to closure.

Non-compliances may result from deficiencies or failures in the management system itself, in plant or equipment, procedures, standards and company practices or from human error. They may be identified by monitoring, audit, inspection, through consultation with employees, communication from contractors, partners, government agencies, the public or from incident investigations. When non-compliances are investigated, the underlying causes are to be established and reported, including any deficiencies with the management system itself. The results of investigations will enable corrective actions to be planned to include measures for:

- restoring compliance as quickly as possible;
- preventing recurrence;
- assessing and limiting any adverse SSHE effects

SECTION 7 AUDIT AND REVIEW

The SSHE DMS is to be subject to annual review by senior managers to ensure that it continues to be effective, and to identify where changes can be made to achieve improved SSHE performance.

Regular, periodic review of the PTTEP SSHE DMS is to be carried out. Reviews will be both inward and outward looking and consider the following:

- SSHE performance achieved against objectives and targets;
- status of SSHE management system documentation (standards, codes of practice, risk registers and compliance registers for example);
- status of internal audit programmes;
- findings of internal audits and status of actions raised;
- status of non-conformances and corrective actions;
- concerns raised by employees, contractors, sub-contractors, partners, government agencies and the public;
- the organisation and allocation of resources for SSHE DMS implementation;
- status of training programmes;
- changing business activities, operating locations, hazards and risks;
- changes to the organisation, individual roles and responsibilities;
- emerging and potential developments in regulations standards and international protocols;
- market influences and pressures;
- changes in environmental tolerability;
- SSHE initiatives and developments by partners and the industry as a whole;
- changes in medical practices;
- case law rulings.

The management review is a key element for promoting continuous SSHE performance improvement

7.1 SSHE DMS AUDITING

Regular audits are to be carried out as a normal business control to independently assess compliance with legislation, Policies, strategic objectives and SSHE planned arrangements; suitability, successful implementation and effectiveness of the SSHE DMS and to identify performance improvement opportunities.

Three basic types of audit are applied:

- Technical and Process Audit, which looks at the hardware and workplace precautions (e.g. systems of work, procedures, instructions) and their operation and maintenance, and compares it against legislative, industry and company standards and codes;
- Specific Hazard Audit, which looks at how a specific hazard (and the associated risk) is eliminated or controlled and the adequacy and effectiveness of the risk control measures. Example topics include loss of hydrocarbon containment, equipment guarding, pipe laying, chemicals, waste, emissions, site security, training and competency, emergency response;
- Management Audit, which looks at compliance with and effectiveness of the SSHE Policies, Objectives and Management System. Management audits evaluate the application of individual elements of the management system (e.g. organisation, resources, and documentation, risk assessment and management, planning, measurement and feedback, audit, review) or application of the system as a whole.

Certain types of audit (e.g. pre-start up, contract compliance) include combinations of these basic types.

7.2 AUDIT PREPARATION

Audit programmes are to be developed that include a schedule of the audits, the focus topic and activities for each audit and the dates on which the audit will be conducted. The audit programme is to be based on the following:

- the significance of the SSHE risks that the activity, location or topic present to the business;
- the contribution to past, or potential contribution to future, SSHE performance;
- the significance of change to the organisation and activities that could influence SSHE performance or risk;
- the results of previous audits.

7.3 AUDIT EXECUTION

Auditing consistency and quality is to be ensured by applying defined and approved methodologies, procedures and supporting company practices.
Audits are to be carried out by competent persons who are independent of the activity or location being audited but can be members of the organisation as a whole. In general, audit teams are to have a broad knowledge of SSHE issues, training and experience in auditing techniques, some experience of the activities being audited, and for some audits, specialist SSHE or other technical expertise, or access to this.

7.4 AUDIT REPORTING AND FOLLOW UP

Audit findings are to be documented in an audit report, together with appropriate corrective actions for non-conformances and opportunities for performance improvement. Recommended actions are to be communicated to the responsible persons. Implementation status of these actions is to be formally recorded, tracked and signed off on completion.

All Drilling SSHE audits shall be documented by the drilling SSHE department all records of findings, corrective actions, closure target dates, responsible persons and status shall be maintained in a central database for tracking and audit purpose.

SECTION 8 EFFECTIVE IMPLEMENTATION

The below table outlines the minimum requirements that each installation and department should have in place for effective implementation of the Drilling SSHE DMS. The list is not exhaustive and details the minimum requirements that shall be applied.

The requirements may also differ due to the area of operation and in line with the local requirements.

Method	Description
Documentation	☑ The following PTTEP documentation shall be available as a minimum in hard copy on the installation for reference: • Drilling Management System Description • Drilling SSHE Management System Overview & Application (This Document) • Well Control Manual • Blow Out Contingency Plan • Emergency Response Plan • Bridging Interface Document ☑ A CD containing other SSHE DMS shall be provided and maintained by SSHE Drilling Department. ☑ All installations shall be made aware of any revisions to the documents by SSHE Drilling Department
Leadership and Commitment	☑ Each installation must have a site specific safety induction and orientation. This shall be documented and auditable. ☑ Prior to commencement of each well (for long duration wells) or following rig moves to new location, a pre spud meeting shall be held with all at office location for main drilling contractors and at site for all personnel. ☑ PTTEP site supervisors to demonstrate active commitment by attending and participating in site safety meetings. ☑ PTTEP site supervisors shall actively participate and promote the safety behavioural programs. ☑ A Management Audit schedule of visits should be available. ☑ A SSHE committee or similar shall be established containing (Non SSHE) personnel from a variety of departments. Minutes of the meetings shall be kept and any issues arising brought to management's attention for consideration and action. ☑ A copy of PTTEP's and Contractors SSHE plan shall be available on the installation and should be endorsed and signed by management. The Plan should show a last review date of no longer than 1 year. ☑ The STOP Job philosophy shall be stressed to all and endorsed by PTTEP management.
Policy and Strategic Objectives	☑ The PTTEP Policy and Contractors Policy shall be displayed in prominent places and if necessary translated in to dual language. The policy shall show last review date and be signed by relevant management. ☑ An effective system to ensure all are made aware of the policies shall be in place whether through the induction process or other means. ☑ The Contractors SSHE Plan should be aligned with PTTEP SSHE Plan as demonstrated in the bridging document. ☑ Site Supervisors shall periodically review progress against the KPI targets highlighting areas of concern or for improvement.
Organization, Resources and Documentation	☑ All contractors with personnel working in the field are selected and managed in accordance with the SSHE Management System, procedures for contractor and supplier management. ☑ It should be demonstrated that PTTEP and Contractors have dedicated members responsible for SSHE matters. ☑ Contractors organization should clearly define SSHE roles and responsibilities. ☑ Minutes of all safety meetings shall be maintained and latest minutes displayed on noticed boards. ☑ Supervisors shall ensure that all accident, incidents and Near Misses are reported promptly and are investigated adequately.

	☑ A site organizational chart for key positions and reporting lines should be displayed in prominent areas around rig/site.
Evaluation and Risk Management	☑ A Risk Register is developed as design work progresses. Risks with significant spill, fatality or MAE potential are analysed further using bowtie analysis. ☑ The Risk Register is reviewed at a Risk Assessment Workshop before being approved. ☑ The Drilling Review Panel will seek an assurance that all SSHE risks are ALARP before approval is sought to move on to the next phase in the drilling project. ☑ PTTEP and Contractor shall have a risk management standard or procedure in place and be subject to review and update as required. ☑ If the area of operation dictates then a SSHE Case/Safety Case shall be available to identify all major hazards and barriers in place. ☑ Prior to any task or shift change a pre-tower or tool box talk shall be conducted and documented. ☑ For Land Operations a tested Journey Management System/Procedure shall be in place. ☑ A SIMOPS procedure and any supporting documentation shall be in place and communicated to all supervisors. ☑ All locations shall have an effective Permit To Work System (PTW) in place for control of all activities. The PTW system will be complimented with: • Job Safety Analysis/TBRA system. • Lock Out Tag Out System. • Training for all personnel. ☑ A standard Behavioural based safety observation program (e.g. STOP) shall be in place. All personnel shall be encouraged to fully participate in the program. Weekly and monthly reports including, areas of observation, by whom (company) and area of risk shall be provided to PTTEP SSHE department by contractor.
Implementation and Operational Control	☑ Before commencement on the first well a Bridging Document (Safety Case Revision for Offshore Australia) is prepared jointly by PTTEP and the drilling contractor. The Bridging Document can cover a long term program of wells in a defined geographical area. ☑ The Bridging Document/SCR uses a standard template to: • Report the results of the campaign/well specific Risk Assessment. • Rolls an responsibilities for the PTTEP drilling supervisor in the management of safety • How interfaces between the drilling contractor SMS and the PTTEP SSHE Management System are handled for both routine operations (e.g. counter signing Permit to Work)and incident response (e.g. well control), contributing to the effective management of safety by ensuring there is one integrated Safety Management System in place. ☑ Both Offshore and Onshore facilities/units shall have a documented handover procedure for handover to and from production as outlined in the SIMOP's Procedure. ☑ Any changes in operational procedures or design shall be assessed for SSHE Implications and be subject to Management Of Change (MOC) process. ☑ All supervisors are to make themselves familiar with the respective Emergency Response Plans and shall participate in the drills and exercise debriefs.
Monitoring and Measurement	☑ Facilities Interface Plans are prepared jointly by the Drilling and Production Departments, and the Drilling Contractor for each visit by a rig to a producing field. Facilities interface plans include: • Preconditions for approach to platform, well handover and resumption/curtailment of SIMOPS • PTW and well handover procedures • Details of the ESD and alarm interface • Detailed procedures for control of personnel, boats and helicopters • Chain of command for routine operations and emergency response • Detailed SIMOPS/Concurrent Operations Matrix. • Joint Hazardous Area Zone interface drawings ☑ All accidents and incidents shall be reported as soon as possible and entered into the Web Based Incident Management Systems (WIMS) It is important that site supervisors/superintendents actively get involved in the early stages of any investigation to ensure that statements are taken promptly and if necessary incident site preserved. ☑ Site supervisors or their designate shall ensure all end of month statistics and man hours are provided to drilling SSHE department at each month end.

Audit and Review	☑ An audit plan and schedule of audits shall be available at site. A system for tracking audit items to closure with responsible person and target date etc shall be implemented and maintained. ☑ If required evidence of closure document revision or photographs etc shall be kept for audit trail purpose. ☑ The Rig Start up Activity, which is part of the Drilling Process, includes a requirement to ensure the rig is ready for operations. This requires a Readiness to Operate Review to be carried out. An audit is also carried out to confirm that any outstanding issues in the pre-hire audit have been carried out. ☑ Site supervisors shall periodically participate in site audits and encourage contractor supervisors to audit their areas of responsibility providing feedback and recommendations for improvement.

SECTION 9 SSHE PLAN AND KPI'S

To enhance effective SSHE performance SSHE KPI's require to be both leading and lagging indicators for measuring and monitoring.

- **Lagging indicators** measure the undesirable events that have already happened. They provide information on incidents that have occurred and analysis into means of preventing similar incidents in the future. In short lagging indicators provide evidence of deficient SSHE performance.

- **Leading Indicators** measure the inputs that are made to SSHE MS and are aimed at raising awareness of identified SSHE critical aspects and what should be implemented to assist in achieving the identified targets and incident free environment. Basically how we will achieve our targets.

The SSHE Plan is a continuous review and improvement process looking at what went well in the previous year and what improvements can be made and achievable targets set accordingly. Thus a SSHE plan shall be subject to annual review.

The SSHE plan is developed to assist in achieving the effective implementation of the Corporate and Drilling SSHE Management system as outlined in this document.

Below is an example of a typical SSHE Plan the plan can be amended as required to suit areas of operations or type of operations but shall be in alignment with Corporate SSHE Plans.

9.1 SSHE PLAN TEMPLATE

SECTION 10 CORPORATE SSHE MS REFERENCES

The below lists the main Corporate SSHE MS documents these documents are subject to review and amendment the full list of documents can be located on intranet following link in section 10.4

10.1 STANDARDS

Document Number	Title
SSHE-106-STD-200	SSHE Due Diligence and JV Requirements Standard
SSHE-106-STD-300	Corporate Oversight of SSHE MS Standard
SSHE-106-STD-310	SSHE Contractor Management Standard
SSHE-106-STD-320	SSHE Communication Standard
SSHE-106-STD-330	SSHE Documentation Management Standard
SSHE-106-STD-340	SSHE Training Competence Standard
SSHE-106-STD-350	SSHE Regulatory Compliance Standard
SSHE-106-STD-400	SSHE risk Management Standard
SSHE-106-STD-430	Asset Integrity Management Standard
SSHE-106-STD-500	Emergency & Crisis Management Standard
SSHE-106-STD-530	Security Management Standard
SSHE-106-STD-550	Corporate SSHE Plan Standard
SSHE-106-STD-570	Management of Change Standard
SSHE-106-STD-600	Incident Management Standard
SSHE-106-STD-610	SSHE KPI and Performance Standard
SSHE-106-STD-620	SSHE Behaviour-Based Safety Standard

10.2 PROCEDURES

Document Number	Title
Standard.PSH.014	Chemical Management Standard
Standard.PSH.013	Minimum SSHE Requirement
Standard.PSH.012	PPE Standard
Standard.PSH.08	Medical Emergency Management Standard
SSHE-106-PDR-502	Emergency Management Plan
SSHE-106-PDR-501	Crisis Management Plan
SSHE-MS.P.15-01	SSHE Due Diligence Audits Procedure
SSHE-MS.P.11-04	New Venture Security Planning Requirements Procedure
SSHE-MS.P.11-03	Security Incident Report and Investigation Procedure
SSHE-MS.P.11-02	Security Review and Audit Procedure
SSHE-MS.P.10-03	Typhoon Evacuation Plan
SSHE-MS.P.08-01	Naked Flame Hot Work Procedure
SSHE-MS.P.07-03	Project and Operational Technical Review Procedure
SSHE-MS.P.07-02	Hazard and Operability Study Methodology
SSHE-MS.P.07-01	Hazard Identification Study Methodology Procedure
SSHE-MS.P.06-01	PSH Documentation Management Procedure
SSHE-MS.P.03-01	SSHE Contractor Management Procedure
SG.PHS.008/03-R1	Spill Contingency Plan for Offshore Operations GoT
S.PSH.003	Simultaneous Construction and Production Operations
PTTEP-MS-E04-P001	Relative Response Team Emergency Response Plan

10.3 GUIDELINES

Document Number	Title
C1	HSE Instructions for Contractors
C2	Guidance for the selection and operation of marine vessel
C3	Guidance notes for underwater operations using divers
C5	Guidance notes for pressure testing
Guideline.PSH.002	Referral of Suspected Communicable disease case to Onshore
Guideline.PSH.003	Health Risk Assessment Guideline
SSHE.MS.G.08-01	Hydrocarbon Release Reduction Guideline
SSHE-106-GDL-501	Medical Emergency Management Guideline
SSHE-106-GDL-601	Occupational Illness Cases Identification Guideline

10.4 USEFUL LINKS

http://b2e/ceo/sites/sshe/PTTEP%20SSHE%20MS/Pages/default.aspx (Corporate SSHE MS)

http://hq-omnippf:83/WebForms/IncidentReport/Create.aspx (WIMS)

\\PTTEP.COM\DFSRoot\0843 EDL\Department Share\37. DRILLING CONTROL DOC\Final Version (G Drive Drilling Final Docs. Cut and paste into browser)

http://b2e/ceo/sites/sshe/SSHE%20Plan/Corporate/Forms/AllItems.aspx (Corporate SSHE Plans)

SSHE Policy & Procedure Bridging/Interface Document

Operator PTTEP
Rig Owner Vantage

Document No: DL-DSS-103

Revision 3

DOCUMENT CONTROL NO. : DL-DSS-103 REV. 3 SSHE POLICY & PROCEDURE BRIDGING INTERFACE DOCUMENT

Custodian	Drilling VP
Document type	Bridging/Interface
Uncontrolled Distribution	All technical personnel in Drilling Selected Drilling Contractors

Date	Revision	Sections	Reason for change
16 Feb 12	3	All	Include Vantage comments and issue for signatures
17 Jan 12	2	All	Include Document references for PTTEP & Vantage and Annual Review

[redacted]

the controlled version and revision announcements will be distributed via e-Mail to relevant parties and published on the Web. Copies or extracts of this manual, which have been downloaded from the website, are uncontrolled copies and cannot be guaranteed to be the latest version. The person using the hard copy is responsible for ensuring they are using the latest version.

This document has a maximum validity of two years after the last revision date. Within this period the document must be assessed for relevance, updated as required and revalidated.

Suggestions for further improvement in this document should be sent to the Document Custodian.

Table of Contents

Section 0 Abbreviations 4
Section 1 Introduction 5
1.1 Objective 5
1.2 Methodology 5
1.3 responsibilities 6
1.4 document revisions 6
1.5 References 6
Section 2 Rig Description 7
2.1 Personnel on board 7
2.2 Site description 7
2.3 Primary functions 7
2.4 Hazardous substances and inventories 8
2.5 Safety systems and procedures 9
2.6 Drawing set 9
2.7 Policy and leadership 10
2.8 Organization and responsibilities 11
2.9 Employee involvement and communication 14
2.10 Resources 15
2.11 Hazard identification and risk management 16
2.12 Objectives, plans and performance standards 17
2.13 Sources of information 18
2.14 Management system documentation 19
2.15 Design, construction and commissioning 20
2.16 Management of change 20
2.17 Purchasing and control of materials and services 21
2.18 Safe operational procedures 22
2.19 Material handling and personnel movement 23
2.20 Offshore mobilization for personnel 24
2.21 Maintenance and repair 24
2.22 Employee selection competency and training 25
2.23 Workplace environment 25
2.24 Emergency response 26
2.25 Medical emergencies 27
2.26 Well control 28
2.27 Incident investigation and reporting 29
2.28 Inspection testing and monitoring 30
2.29 Health monitoring system 31
2.30 Safety management system audit 32
2.31 Review and improvement 32
Section 3 Formal Safety Assessment 34
3.1. Background 34
3.2 Review of Vantage management systems 34
Section 4 PTTEP policy 35
Section 5 Vantage policy 36
Section 6 PTTEP lifting equipment colour code plan 37
Section 7 SSHE Drilling ms interface arrangements 38
Section 8 Standard 46
Procedures 46
Guidelines 47

This document is the property of PTTEP. It must not be stored, reproduced or disclosed to others without written authorization from the Company.

SECTION 0 ABBREVIATIONS

Abbreviation	Meaning
ALARP	As Low as Reasonably Practicable
BHA	Bottom Hole Assembly
BKK	Bangkok
BOP	Blow Out Preventer
DSV	Drilling Supervisor
ED	Emerald Driller
ER	Emergency Response
ESD	Emergency Shutdown
H_2S	Hydrogen Sulphide
HAZID	Hazard Identification
HAZOP	Hazard and Operability Study
IBOP	Internal Blow Out Preventer
JSA	Job Safety Analysis
LTI	Lost Time Incident
MODU	Mobile Offshore Drilling Unit
MSDS	Materials Safety Data Sheet
MWD	Measurement While Drilling
OIM	Offshore Installation Manager
PIC	Person in Charge
POB	Persons Onboard
PPE	Personal Protective Equipment
psi	Pounds Per Square Inch
PTW	Permit to Work
ROP	Rate of Penetration
SIMOPS	Simultaneous Well and other Operations
SISP	Shut-in Surface Pressure
SITHP	Shut In Tubing Head Pressure
SMS	Safety Management System
SSHE	Safety, Security, Health and Environment
TRIR	Total Recordable Incident Rate

This document is the property of PTTEP. It must not be stored, reproduced or disclosed to others without written authorization from the Company.

PTT Exploration & Production Public Co., Ltd.	DL-DSS-108
Drilling Safety Handbook	Date : 12 March 2012

Drilling Safety Handbook

DOCUMENT NO. : DL-DSS-108

Drilling Safety Handbook	DL-DSS-108
DOCUMENT CONTROL	Date : 12 March 2012

DOCUMENT CONTROL : DL-DSS-108 DRILLING SAFETY HANDBOOK

Custodian	VP Drilling
Document type	Safety Handbook
Uncontrolled Distribution	All technical personnel in Drilling

Date	Revision	Sections	Reason for change
12 Mar. 12	0	All	Issued

[redacted]

This document is the controlled version and revision announcements will be distributed via e-mail to relevant parties and published on the Web. Copies or extracts of this manual, which have been downloaded from the website, are uncontrolled copies and cannot be guaranteed to be the latest version. The person using the hard copy is responsible for ensuring they are using the latest version.

This document has a maximum validity of two years after the last revision date. Within this period the document must be assessed for relevance, updated as required and revalidated.

Suggestions for further improvement in this document should be sent to the Document Custodian.

This document is the property of PTTEP. It must not be stored, reproduced or disclosed to others without written authorization from the Company.

INTRODUCTION

PTTEP is dedicated to providing and maintaining a safe working environment for our employees…. our most important asset. The following policies and procedures were established to help create such an environment. This manual was developed by representatives within the industry, based on experience and knowledge gained over the years.

A commitment to these safety philosophies is a top priority, not only for managers and supervisors, but for each employee. Each employee must understand that he is the "supervisor" of his own safety, and the safety of his co-workers.

Your co-workers are not only PTTEP employees, but every individual working or visiting on the Rig…. from service company personnel to catering personnel to the company man… our customer and yours. The safety of these people is just as important as the safety of the people employed by PTTEP. Your visible actions for your "co-workers" safety is contagious. It spreads to the point of an accident-free rig. This reflects and image, established by you, that your rig and PTTEP has the safest operation in the Drilling Industry, an image to be proud of. Think about it, your safety is your future, and ours.

This manual does not cover every aspect of safety. Special circumstances will occur that require the judgement, experience, and common sense of each employee. When these circumstances present themselves, each person involved will be expected to act in a logical and mature way with the primary objective being the welfare of he and his co-workers. No individual will be excused from using "common sense" and basic safe working practices. The sound application of these personal attributes will be the most basic building block in our commitment to preventing accidents.

Your adherence to these policies and procedures is required. This will assist each employee in achieving an expected career objective of never being involved in an accident. Our people are our most important asset.

This document is the property of PTTEP. It must not be stored, reproduced or disclosed to others without written authorization from the Company.

TABLE OF CONTENTS

Table of Contents 3
Section 0 Abbreviations 5
Section 1 PTTEP policy 6
Section 2 guidance policies & procedures 6
2.1 observation of policys 7
2.2 SSHE policy 7
2.3 Stop work authority 7
2.4 safety policy on drugs alcohol and weapons 7
2.5 safety policy on horse play 7
Section 3 safety standards and procedures 8
3.1 station bills 8
3.2 emergency drills and exercises 8
3.2.1 Abandon Rig Drills 8
3.2.2 Fire Drills 9
3.2.3 Search and Rescue Drills 9
3.2.4 Man Overboard Drill (MOB) 9
3.3 Behaviour Based Safety 10
3.4 medical care & support 10
3.4.1 Medical Protocols 10
3.4.2 Medical Evacuation 11
3.5 Lifesaving equipment 11
3.6 Safety procedures lifeboats & Inflatable Liferafts 11
3.6.1 Launching Safety 11
3.6.2 Inflatable Life rafts 12
3.6.3 Life Jackets 12
3.6.4 Work Vests 12
3.6.5 Lifebuoys 12
3.6.6 Additional Life saving Equipment 12
3.7 Safety policy on fire protection 13
3.7.1 Classification of Fires 13
3.7.2 Types of Extinguishing Agents 13
3.7.3 Extinguisher Identification 13
3.8 safety policy on personal protective equipment (PPE) 14
3.9 safety policy on breathing apparatus 14
3.10 safety policy gas detection systems 14
3.11 safety policy on h2s 15
3.12 safety policy on personnel basket 15
3.13 safety policy on new arrivals 16
3.14 Safety policy on pob lists 16
3.15 safety policy on t card system 16
3.16 safety policy on safety meetings 17
3.17 safety policy on sshe moments 17
3.17.1 Safety Policy on SSHE Committee's 17
3.18 safety policy on toolbox talks 18
3.19 safety policy on housekeeping 18
3.20 safety policy on smoking 18
3.21 safety policy on communication 19
3.22 safety policy on job safety analysis (JSA) 19
3.23 safety policy on electrical lockout & electrical work 20
3.23.1 Electrical First Aid 20
3.24 safety policy on compressed air 20
3.25 safety policy on work over water 21
3.26 safety policy of storage and use of combustables 21
3.27 safety policy on explosives, radioactive materials and volatile liquid gases 22

This document is the property of PTTEP. It must not be stored, reproduced or disclosed to others without written authorization from the Company.

3.28 safety policy on confined space entry 22
3.29 safety policy on helicopter operations 23
3.30 safety policy on equipment maintenance, inspection & use 24
3.31 safety policy on cranes 24
3.32 safety policy on derrick escape line 24
3.33 safety policy on driving 25
3.34 safety policy on pa address system 25
3.35 safety policy on accident & Near Miss Reporting 26
3.36 safety policy on lost time incidents 26
3.37 safety policy on third party contractors 26
3.38 safety policy on tripping tubulars 26
3.39 safety policy on welding & cutting 27
3.40 safety policy on safe working practices 29
3.41 safety procedure on homemade equipment 29
3.42 safety procedure on use of hand tools 29
3.43 safety procedure on rotary slips 29
3.44 safety procedure on catheads 29
3.45 safety procedure on air hoists 30
3.46 safety procedure on pipe tongs and lines 30
3.47 safety procedure on rotary and bumper 30
3.48 safety procedure on hand rails and stairs 30
3.49 safety procedures on decks, walkways and floors 30
3.50 safety procedure on equipment guarding 30
3.51 safety procedure on derrick & masts 31
3.52 safety procedure on drilling line, crown block & travelling block 31
3.53 safety procedure on mud pumps and equipment 31
3.54 safety procedures on high pressure lines and fittings 32
3.55 safety procedures on engine and engine compounds 32
3.56 safety procedures on blow out prevention equipment 32
3.57 safety procedures on stabbing board 33
3.58 safety procedures on tripping pipe 33
3.59 safety policy on forklifts and wheel loaders 34
3.60 safety policy on permit to work (PTW) system 35
3.61 Safety policy on hot work 35
3.62 safety policy on waste management 35
3.63 safety policy on simultaneous operations (SIMOP's) 35

This document is the property of PTTEP. It must not be stored, reproduced or disclosed to others without written authorization from the Company.

เอกสารแนบ 1-10

การจัดการด้านการจราจร

<u>ข้อปฏิบัติในการขับรถ</u>

1. ยานพาหนะต้องเหมาะสมกับวัตถุประสงค์ของการใช้และมีการดูแลรักษาอยู่ประจำ เพื่อให้อยู่ในสภาพพร้อมใช้งาน

- ***<u>เข็มขัดนิรภัย 3 จุด สภาพใช้งานได้ทุกที่นั่ง</u>***
- **จัดเตรียมกระเป๋ายา ประจำรถ**
- **จัดเตรียม ที่ทุบกระจก ประจำรถ**
- **จัดเตรียมถังดับเพลิง ประจำรถ**
- **เบาะนั่งอยู่ในสภาพใช้งานได้ดี**
- **มีหมอนรองศีรษะทุกที่นั่ง**

2. ผู้ขับรถจะต้องแจ้งให้ผู้โดยสารคาดเข็มขัดนิรภัยทราบก่อนออกรถทุกครั้ง

<u>ในกรณีเกิดเหตุฉุกเฉิน หรือมีข้อเสนอแนะ</u> <u>กรุณาติดต่อ หมายเลขโทรศัพท์</u> <u>043-232933</u>

3. ผู้ขับขี่และผู้โดยสารต้องคาดเข็มขัดนิรภัยทุกครั้ง
4. ผู้โดยสารต้องไม่เกินจำนวนที่นั่ง
5. ห้ามบรรทุกของเกินน้ำหนักที่กฎหมายกำหนดและมาตรฐานของรถ
6. ผู้ขับขี่ต้องอยู่ในสภาพที่พร้อมทำงาน มีใบอนุญาตขับขี่ตามประเภทของรถ
7. ผู้ขับขี่ห้ามใช้โทรศัพท์มือถือเด็ดขาดในขณะขับรถ ถ้าจำเป็นควรจอดข้างทาง ในเส้นทางที่สามารถมองเห็นได้ชัดเจน
8. ห้ามดื่มสุรา สารเสพติด หรือยาที่มีผลกระทบต่อการขับขี่ จะมีการตรวจวัดระดับแอลกอฮอล์ทุกครั้ง
9. ควรดับเครื่องยนต์เมื่อไม่ได้ใช้งาน
10. ห้ามขับรถเกิน 40 กิโลเมตรต่อชั่วโมงบนถนนในเขตป่าสงวน และ 90 กิโลเมตรต่อชั่วโมงบนถนนหลวง หรือตามป้ายกำหนดความเร็ว
11. ให้ระวังถนนเปียก สภาพอากาศไม่ดี และขับขี่บนถนนในหมู่บ้าน หรือ ชุมชน
12. ขับรถให้ทิ้งระยะห่างรถข้างหน้าพอสมควร
13. รถควรมีสภาพพร้อมใช้งานและมีการตรวจสภาพรถก่อนใช้งาน (ตามเอกสารการตรวจสภาพรถของบริษัท)
14. ห้ามบรรทุกสิ่งของที่เป็นอันตราย หรือ อาจทำให้เกิดกลิ่นรำคาญต่อผู้โดยสาร
15. ห้ามมิให้ใช้รถในการอื่น นอกเหนือจากได้รับมอบหมายจากบริษัท
16. ปฏิบัติตามป้าย และ กฎจราจรอย่างเคร่งครัด
17. ยาง ควรมีการเปลี่ยนทุก 50,000 กม.

****

ROUTE AND LOCATION SURVEY CHECK LISTS

LOCATION : _____ WELL PAD-C _____

DATE : _____05 June 2022_Update on 16 Jul 2022_____

Contractor GW221 บริษัท GW221	GW221	**Rig move from** เคลื่อนย้ายจาก	WPB	**To** ไปที่	WPC	**Distance** ระยะทาง	5.3	**Km.** ก.ม.
Traffic control personal point จำนวนจุดตามทางแยกขอให้จัดเจ้าหน้าที่เพื่อควบคุมการจราจร		**Total manpower** จำนวนเจ้าหน้าที่		**DSV/WOS Name**		Mr.Chaiwat/ Mr.Paitoon		
				LKU Field Sup. Name		Mr.Samatthapong M.		

		Detail (รายละเอียด)	**Safe** ปลอดภัย	**Unsafe** ไม่ปลอดภัย	**N/A** ไม่เกี่ยวข้อง	**Remark** หมายเหตุ
Well Site or Rig Camp (พื้นที่ภายในฐานผลิต หรือ พื้นที่พักพนักงาน)	1	Any materials obstruct on location during operation ex. X-mas tree, Working beampump, Control equipment, mound soil etc. (มีวัสดุ อุปกรณ์ เครื่องมือ ที่กีดขวางระหว่างการดำเนินการ เช่น หัวบ่อหลุมน้ำมัน, ปั๊มหัวโยก, ที่ควบคุมอุปกรณ์, กองดิน และ อื่นๆ)		✗		
	2	Identify the site layout with include the electrical cable line, underground utilities on the location.Grounding installation point identifies and verifies by production and construction team. Develop the mitigation plan to control. (ระบุแผนผังของฐานผลิต จุดที่มีสายไฟฟ้าติดตั้ง ระบบสาธารณูปโภคใต้ดิน จุดติดตั้งสายดิน จะต้องถูกระบุและตรวจสอบโดยทีมการผลิตและทีมงานก่อสร้าง รวมทั้งระมุมาตรการป้องกันในการจัดการความเสี่ยง) **Remark : Found high voltage pole at back side of rig camp. พบเสาไฟฟ้าแรงสูงบริเวณด้านหลังที่พักพนักงาน		✗		Request site layout include the electrical cable line.
	3	Earthing pit installation point identifies and verifies by production and construction team the electrical. จุดติดตั้งปลกราวด์จะต้องถูกระบุและตรวจสอบโดยทีมการผลิตและทีมงานก่อสร้าง	✓			
	4	Develop equipment layout fix with site location map. (กำหนดการจัดวางอุปกรณ์แท่นเจาะในพื้นที่ของฐานผลิต)	✓			
	5	Requires a sound barrier for preventing the impacts with the community accordance with the measures set out in the environmental impact assessment. (กำหนดให้มีติดตั้งกำแพงกันเสียง กรณีมีผลกระทบกับชุมชนตามมาตรการที่กำหนดไว้ในการประเมินผลกระทบทางสิ่งแวดล้อม)	✓			
	6	Well cellars are considered empty and no spill potential. (Well cellar ต้องไม่มีของเหลวภายใน ที่มีโอกาสส่งผลต่อการหกรั่วไหล)	✓			
	7	Concrete pit in good condition and water in pit without oil contamination. (บ่อคอนกรีตต้องไม่ชำรุด อยู่ในสภาพพร้อมใช้งานและสภาพน้ำในบ่อไม่ปนเปื้อนน้ำมัน)	✓			
	8	Earth bund in good condition for cutting. (สภาพบ่อดินสำหรับเศษดินเศษหินจากการขุดเจาะอยู่ในสภาพพร้อมใช้งาน)	✓			
	9	The condition of the ground and cement pad in the location are in good condition and smoothly.Consider installing a steel plate for Sub base. (สภาพของพื้นดินในฐานผลิตอยู่ในสภาพพร้อมใช้งาน ไม่มีความต่างระดับของพื้นที่ พิจารณาการติดตั้งแผ่นเหล็กสำหรับรองฐานอุปกรณ์ Subbase)		✗		
	10	Water supply lines install on location.(มีการติดตั้งท่อส่งน้ำ)		✗		
	11	Waste water from cabin can drain to septic tank. (น้ำเสียจากที่พักสามารถระบายลงน้ำถังบำบัดน้ำเสีย)	✓			
	12	Route inside location is in good condition. (ถนนภายในฐานผลิตอยู่ในสภาพพร้อมใช้งาน)	✓			
	13	Concrete gutter is not clogged.(รางน้ำคอนกรีตไม่มีการอุดตัน)	✓			
	14	Well site perimeter fencing in good condition.(รั้วรอบอยู่ในสภาพดี)	✓			
	15	Emergency Shutdown Systems (ESD) installation is required before rig operation. (กำหนดให้มีการติดตั้ง ESD ก่อนแท่นเจาะทำการขุดเจาะ)	✓			
	16	The level of Earth bund must be higher than surface of location.(especially during the rainy season) (ตรวจสอบระดับของบ่อดินต้องอยู่สูงกว่าระดับของพื้นดินไซต์นั้นๆ) โดยเฉพาะช่วงหน้าฝน	✓			
	17	Other concerns (รายละเอียดที่เกี่ยวข้องอื่นๆ)				
Route (เส้นทาง)	1	Electric cables are lower than 5.50 meters or the highest equipment level. (สายไฟ/สายโทรศัพท์ต่ำกว่า 5.5 เมตร หรือระดับความสูงของอุปกรณ์ที่สูงที่สุด)	✓			
	2	Tree branch are lower than 5.50 meter and not obstruct at either side. (กิ่งไม้ต่ำกว่า 5.5 เมตร และไม่มีกิ่งไม้ยื่นกีดขวางเส้นทาง)		✗		
	3	Route to location is in good condition. Identify rig move route, u-turn and traffic control. (ถนนอยู่ในสภาพดี ระบุเส้นทางการเดินรถ จุดกลับรถและมาตรการควบคุมจราจร)	✓			
	4	Water truck spraying water on the road to prevent the dust might be spread in air. (รถบรรทุกน้ำฉีดพ่นน้ำไว้บนท้องถนนเพื่อป้องกันฝุ่นละอองอาจแพร่กระจายไปในอากาศ)	✓			
	5	Community clearance, local rules, regulation; to be informed and well coordinated with local leader/officers/police officer for traffic to understand situation coming up period of moving equipment into the area. (กฎระเบียบท้องที่ ประสานงานกับผู้นำท้องถิ่น / เจ้าหน้าที่ / เจ้าหน้าที่ตำรวจเพื่อให้เข้าใจถึงสถานการณ์ที่กำลังเคลื่อนย้ายอุปกรณ์เข้ามาในพื้นที่)		✗		DSV to infrom PTTEP Public Relations about move date.
	6	Emergency response team and emergency contacts are updated. (ทีมตอบสนองฉุกเฉินและเบอร์ติดต่อในกรณีฉุกเฉินอัพเดท)	✓			
	7	Journey management planning (ระมุการวางแผนการเดินทาง)	✓			
	8	Other concerns (รายละเอียดที่เกี่ยวข้องอื่นๆ)				

PTTEP	LOCATION SURVEY DESCRIPTION	
	LOCATION	PAD-C
	DATE	5/6/2022 Update 16/07/2022
	DISTANCE	5.3 km

	Detail (รายละเอียด)	Hazard description (รายละเอียดของอันตราย)	Initial Risk ความเสี่ยงก่อนควบคุม						Mitigation & Control Planning (มาตรการควบคุม)	Residual Risk ความเสี่ยงหลังหลังควบคุม						Status สถานะ	Tatget date กำหนดแล้วเสร็จ	Action By รับผิดชอบโดย	Remark หมายเหตุ
			People	Assest	Env.	Reputation	Frequency	Risk		People	Assest	Env.	Reputation	Frequency	Risk				
1	Concrete bund, hand rails pressure transmitter and casing pressure stand around well cellar obstruct when spotting subbase. ขอบคอนกรีต ราวกันตก pressure transmitter และ casing pressure stand รอบหลุมเจาะ กีดขวางการจัดวางแท่นเจาะ 	-Property damage อุปกรณ์เสียหาย	3	3	2	2	B	M	Remove concrete bund, hand rails pressure transmitter and casing pressure stand around well cellar for spotting subbase. เคลื่อนย้ายขอบคอนกรีต ราวกันตก pressure transmitter และ casing pressure stand รอบหลุมเจาะออก	1	1	1	1	B	L	Complete	Before rig move	Construction	
2	Lifting arm, suction line, pressure transmitter and casing pressure stand at well cellar obstruct when spotting subbase. แขนช่วยยก ท่อสูบน้ำ pressure transmitter และ casing pressure stand บริเวณหลุมเจาะ กีดขวางการจัดวางแท่นเจาะ 	-Property damage อุปกรณ์เสียหาย	3	3	2	2	B	M	Remove lifting arm, suction line, pressure transmitter and casing pressure stand around well cellar for spotting subbase. เคลื่อนย้ายแขนช่วยยก ท่อสูบน้ำ pressure transmitter และ casing pressure stand บริเวณหลุมเจาะออก	1	1	1	1	B	L	Complete	Before rig move	Construction	
3	Submersible pump and suction line of well PH-11 obstruct drilling operation ปั๊มใต้น้ำและท่ออูดูดน้ำของหลุม PH-11 กีดขวางการดำเนินการขุดเจาะ 	-Property damage อุปกรณ์เสียหาย	3	3	2	2	B	M	Remove submersible pump and suction line of well PH-11 ขนย้ายปั๊มใต้น้ำและท่ออูดูดน้ำของหลุม PH-11ออกจากพื้นที่	1	1	1	1	B	L	incomplete	Before rig move	Construction	

PTTEP	LOCATION SURVEY DESCRIPTION	
	LOCATION	PAD-C
	DATE	5/6/2022 Update 16/07/2022
	DISTANCE	5.3 km

	Detail (รายละเอียด)	Hazard description (รายละเอียดของอันตราย)	Initial Risk ความเสี่ยงก่อนควบคุม						Mitigation & Control Planning (มาตรการควบคุม)	Residual Risk ความเสี่ยงหลังหลังควบคุม						Status สถานะ	Tatget date กำหนดแล้วเสร็จ	Action By รับผิดชอบโดย	Remark หมายเหตุ
			People	Assest	Env.	Reputation	Frequency	Risk		People	Assest	Env.	Reputation	Frequency	Risk				
4	No well head cover on PH-11, PH-10, PH-04, PH-13 and PH-15 ไม่มีหลังคาของหลุม PH-11, PH-10, PH-04, PH-13 และ PH-15 	-Property damage อุปกรณ์เสียหาย	3	3	2	2	B	M	Prepare wellhead cover for PH-11, PH-10, PH-04, PH-13 and PH-15 เตรียมหลังคาสำหรับหลุม PH-11, PH-10, PH-04, PH-13 และ PH-15	1	1	1	1	B	L	incomplete At Well no.PH13 & PH15 don't have cover. 	Before rig move	Construction 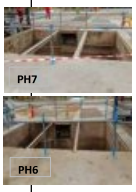	Well PH7 & PH6 must be install the grating.
5	X-mas tree of well PH-10 obstruct rig up operation. X-mas tree ของหลุม PH-10 กีดขวางการติดตั้งแท่นเจาะ No grating provided for well PH-10 and PH-04 ไม่มีตะแกรงปิดหลุม PH-10และ PH-04 	-Property damage อุปกรณ์เสียหาย -Fall from height ตกจากที่สูง	3	3	2	2	B	M	Cut the X-mas tree of well PH-10 to lower than 1.17 m ตัด X-mas tree ของหลุม PH-10 ให้ต่ำกว่า 1.17 เมตร Provide grating for well PH-10 and PH-04 เตรียมตะแกรงสำหรับหลุม PH-10 และ PH-04	1	1	1	1	B	L	Complete	Before rig move	Construction	
6	No well cellar provided for drilling operation ไม่มีบ่อสำหรับการขุดเจาะ 	-Property damage อุปกรณ์เสียหาย -Waste water spill to the ground ของเสียจากการขุดเจาะรั่วไหลลงสู่พื้นดิน	3	3	2	2	B	M	Provide well cellar for drilling operation เตรียมบ่อสำหรับการขุดเจาะ	1	1	1	1	B	L	Complete	Before rig move	Construction	

	LOCATION SURVEY DESCRIPTION	
PTTEP	LOCATION	PAD-C
	DATE	5/6/2022 Update 16/07/2022
	DISTANCE	5.3 km

	Detail (รายละเอียด)	Hazard description (รายละเอียดของอันตราย)	Initial Risk ความเสี่ยงก่อนควบคุม						Mitigation & Control Planning (มาตรการควบคุม)	Residual Risk ความเสี่ยงหลังหลังควบคุม						Status สถานะ	Tatget date กำหนดแล้วเสร็จ	Action By รับผิดชอบโดย	Remark หมายเหตุ
			People	Assest	Env.	Reputation	Frequency	Risk		People	Assest	Env.	Reputation	Frequency	Risk				
7	Well head cover of well PH-11 obstruct rig up operation หลังคาของหลุม PH-11 กีดขวางการติดตั้งแท่นเจาะ 	-Property damage อุปกรณ์เสียหาย	3	3	2	2	B	M	Shorten the wellhead cover length from 5.21 m to 4 m. for rig up operation. ลดความยาวของหลังคา จาก 5.21 เมตร ให้เหลือ 4 เมตร เพื่อการติดตั้งแท่นเจาะ	1	1	1	1	B	L	Complete	Before rig move	Construction	
8	Fire extinguisher and housing on location obstruct drilling operation ถังดับเพลิงและโรงเก็บกีดขวางการดำเนินการขุดเจาะ 	-Property damage อุปกรณ์เสียหาย	3	3	2	2	B	M	Remove fire extinguisher and housing on this area out of location ขนย้ายถังดับเพลิงและโรงเก็บออกจากพื้นที่	1	1	1	1	B	L	Complete	Before rig move	Construction	
9	Found the contaminated fluid in concrete pit. พบน้ำปนเปื้อนในบ่อคอนกรีต 	-Property damage อุปกรณ์เสียหาย - Slip hazard อันตรายจากการลื่นล้ม	3	1	3	3	B	M	Need to suck contaminated fluid out and clear cutting waste pit. ดูดน้ำปนเปื้อนออกจากบ่อคอนกรีตและทำความสะอาดบ่อของเสีย Check water condition of water pit. ตรวจวัดคุณภาพน้ำใน water pit	1	1	1	1	B	L	incomplete	Before rig move	Construction	

	LOCATION SURVEY DESCRIPTION	
PTTEP	LOCATION	PAD-C
	DATE	5/6/2022 Update 16/07/2022
	DISTANCE	5.3 km

	Detail (รายละเอียด)	Hazard description (รายละเอียดของอันตราย)	Initial Risk ความเสี่ยงก่อนควบคุม						Mitigation & Control Planning (มาตรการควบคุม)	Residual Risk ความเสี่ยงหลังหลังควบคุม						Status สถานะ	Tatget date กำหนดแล้วเสร็จ	Action By รับผิดชอบโดย	Remark หมายเหตุ
			People	Assest	Env.	Reputation	Frequency	Risk		People	Assest	Env.	Reputation	Frequency	Risk				
10	Front handrail of cutting waste pit obstructs rig operation ราวกันตกด้านหน้าบ่อคอนกรีต กีดขวางการดำเนินการขุดเจาะ 	-Property damage อุปกรณ์เสียหาย	3	1	3	3	B	M	Remove front handrail of cutting waste pit for release drill cuttings. ถอดราวกันตกด้านหน้าบ่อของเสียออก	1	1	1	1	B	L	Complete	Before rig move	Construction	
11	Water supply line on location not in good condition. ท่อส่งน้ำในที่ไม่อยู่ในสภาพพร้อมใช้งาน 	-Biological hazard อันตรายทางชีวภาพ/สุขภาพพนักงาน	3	4	1	1	A	M	Prepare water line in good condition and provide 3-way pipe + valve at rig camp area and concrete pit area (2 point) เตรียมท่อส่งน้ำให้อยู่ในสภาพพร้อมใช้งาน และ เพิ่ม 3 ทางและวาล์ว 2 จุด ที่บริเวณที่พักและบ่อน้ำดี	1	1	1	1	B	L	Complete	Before rig move	Construction	
12	Septic tank and pipeline not ready to use. บ่อเกรอะและท่อส่งไม่พร้อมใช้งาน 	- Protential spill การหกรั่วไหล - Slip hazard อันตรายจากการลื่น	3	1	3	3	B	M	Prepare septic tank and pipeline for ready to use (Clean and empty) เตรียมบ่อเกรอะและท่อส่งให้พร้อมใช้งาน (สูบออกและทำความสะอาด)	1	1	1	1	B	L	Complete	Before rig move	Construction	

	LOCATION SURVEY DESCRIPTION
LOCATION	PAD-C
DATE	5/6/2022 Update 16/07/2022
DISTANCE	5.3 km

	Detail (รายละเอียด)	Hazard description (รายละเอียดของอันตราย)	Initial Risk ความเสี่ยงก่อนควบคุม						Mitigation & Control Planning (มาตรการควบคุม)	Residual Risk ความเสี่ยงหลังหลังควบคุม						Status สถานะ	Tatget date กำหนดแล้วเสร็จ	Action By รับผิดชอบโดย	Remark หมายเหตุ
			People	Assest	Env.	Reputation	Frequency	Risk		People	Assest	Env.	Reputation	Frequency	Risk				
13	Production container obstruct rig camp area ตู้ฝ่ายผลิตกีดขวางการติดตั้งที่พัก 	-Property damage อุปกรณ์เสียหาย	2	2	3	2	B	M	Relocate production container to outside. ขนย้ายตู้ฝ่ายผลิตออกจากพื้นที่	1	1	1	1	B	L	Complete	Before rig move	Production	
14	No thick tarpaulin and steel plate to cover the grating area ไม่มีผ้าใบหนาและแผ่นเหล็กปิดคลุมตะแกรงของแนวท่อแก๊ส 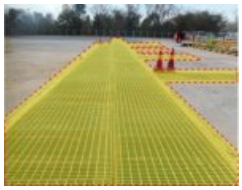 	-Waste water spill to the ground ของเสียจากการขุดเจาะรั่วไหลลงสู่พื้นดิน -Property damage อุปกรณ์เสียหาย	3	1	3	3	B	M	Grating area to be covered with thick tarpaulin (to prevent water getting in) and topped the tarpaulin with steel plates for spotting rig equipment. คลุมแนวตะแกรงด้วยผ้าใบหนาและปิดทับด้วยแผ่นเหล็ก เพื่อป้องกันน้ำร่วงไปในแนวท่อแก๊ส และป้องกันยานพาหนะช่วงขนส่ง	1	1	1	1	B	L	Complete	Before rig move	Construction	

	LOCATION SURVEY DESCRIPTION
LOCATION	PAD-C
DATE	5/6/2022 Update 16/07/2022
DISTANCE	5.3 km

	Detail (รายละเอียด)	Hazard description (รายละเอียดของอันตราย)	Initial Risk ความเสี่ยงก่อนควบคุม						Mitigation & Control Planning (มาตรการควบคุม)	Residual Risk ความเสี่ยงหลังหลังควบคุม						Status สถานะ	Tatget date กำหนดแล้วเสร็จ	Action By รับผิดชอบโดย	Remark หมายเหตุ
			People	Assest	Env.	Reputation	Frequency	Risk		People	Assest	Env.	Reputation	Frequency	Risk				
15	No block drain line to outside location during rig operation. ไม่มีการกั้นรางระบายน้ำออกนอกพื้นที่ ขณะทำการขุดเจาะ 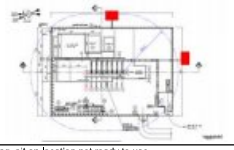	-Waste water spill to the ground ของเสียจากการขุดเจาะรั่วไหลลงสู่พื้นดิน	3	1	3	3	B	M	Drain line to outside location to be blocked to prevent water spill out during rig operation. จัดเตรียมกระสอบทรายปิดกั้นรางน้ำที่จะออกไปนอกพื้นที่ ในช่วงที่ขุดเจาะ	1	1	1	1	B	L	Complete	Before rig move	Construction	
16	Grounding pit on location not ready to use. บ่อกราวด์ในพื้นที่ไม่พร้อมใช้งาน 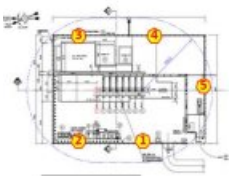	-Property damage อุปกรณ์เสียหาย -Electrical shock ไฟฟ้าดูด/ไฟฟ้าช็อต	3	3	2	2	B	M	Provide grounding pit as per drawing, Make bus bar for hooking up at every earthing point around the site and resistance to be tested เตรียมบ่อกราวด์ตามแบบ และทำ bus bar ไว้ตามจุดต่างๆ ในพื้นที่ และทำการทดสอบค่าความต้านทาน	1	1	1	1	B	L	Complete	Before rig move	Construction	

PTTEP	**LOCATION SURVEY DESCRIPTION**	
	LOCATION	**PAD-C**
	DATE	**5/6/2022 Update 16/07/2022**
	DISTANCE	**5.3 km**

	Detail (รายละเอียด)	Hazard description (รายละเอียดของอันตราย)	Initial Risk ความเสี่ยงก่อนควบคุม						Mitigation & Control Planning (มาตรการควบคุม)	Residual Risk ความเสี่ยงหลังหลังควบคุม						Status สถานะ	Tatget date กำหนดแล้วเสร็จ	Action By รับผิดชอบโดย	Remark หมายเหตุ
			People	Assest	Env.	Reputation	Frequency	Risk		People	Assest	Env.	Reputation	Frequency	Risk				
17	Lamp along the fence obstruct the trailer and unloading operation. หลอดไฟตามแนวรั้วกีดขวางการเคลื่อนย้ายอุปกรณ์ 	-Property damage อุปกรณ์เสียหาย -Electrical shock ไฟฟ้าดูด/ไฟฟ้าช็อต -Drop object วัตถุ สิ่งของ หล่นกระแทก	3	3	2	2	B	M	Move the lamp along the fence in parallel direction with the fence. หมุนหลอดไฟแนวรั้ว ให้ขนานกับแนวรั้ว	1	1	1	1	B	L	Complete	Before rig move	Construction	
18	Found tree and bushes at both Emergency exits and route to muster areas. พบต้นไม้และพุ่มไม้บริเวณทางออกฉุกเฉินและเส้นทางไปยังพื้นที่รวมพล 	-Slip and trip hazard อันตรายจะการลื่น สะดุด	2	2	2	3	B	M	Clear tree and bushes at both Emergency exits and route to muster areas. ตัดต้นไม้และพุ่มไม้บริเวณทางออกฉุกเฉินและเส้นทางไปยังพื้นที่รวมพล	1	1	1	1	B	L	Complete	Before rig move	Construction	
19	No sand bags to prevent mud in rainy season going into substation ไม่มีกระสอบทรายที่ substation 	-Property damage อุปกรณ์เสียหาย	2	2	3	2	B	M	Provide 2 layer of sand bags to prevent mud in rainy season going into substation. เตรียมกระสอบทรายป้องกันน้ำและโคลนไหลเข้าสู่ substaion ช่วงฤดูฝน	1	1	1	1	B	L	Complete	Before rig move	Construction	

PTTEP	**LOCATION SURVEY DESCRIPTION**	
	LOCATION	**PAD-C**
	DATE	**5/6/2022 Update 16/07/2022**
	DISTANCE	**5.3 km**

	Detail (รายละเอียด)	Hazard description (รายละเอียดของอันตราย)	Initial Risk ความเสี่ยงก่อนควบคุม						Mitigation & Control Planning (มาตรการควบคุม)	Residual Risk ความเสี่ยงหลังหลังควบคุม						Status สถานะ	Tatget date กำหนดแล้วเสร็จ	Action By รับผิดชอบโดย	Remark หมายเหตุ
			People	Assest	Env.	Reputation	Frequency	Risk		People	Assest	Env.	Reputation	Frequency	Risk				
20	Found gutter clogged and low level around location พบร่องน้ำอุดตันและมีระดับต่ำรอบพื้นที่ 	-Waste water spill to the ground ของเสียจากการขุดเจาะรั่วไหลลงสู่พื้นดิน	3	1	3	3	B	M	Repair the gutter and make the level. ซ่อมแซมร่องน้ำและยกระดับ Clean the gutter for ready to use. ทำความสะอาดร่องน้ำให้พร้อมใช้งาน	1	1	1	1	B	L	Incomplete	Before rig move	Construction	**The floor has not been leveled.**
21	No steel plate porvided for skidding area ไม่มีแผ่นเหล็กรองสำหรับพื้นที่การเคลื่อนที่ของแท่นเจาะ 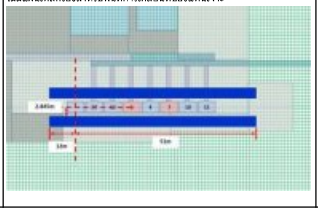	-Property damage อุปกรณ์เสียหาย	3	3	2	2	B	M	Provide steel plate for rig skidding as per drawing (skidding steel plate) เตรียมแผ่นรองรับการเคลื่อนที่ของแท่นเจาะตามแบบ (skidding steel plate)	1	1	1	1	B	L	Incomplete	Before rig move	Construction	

PTTEP	**LOCATION SURVEY DESCRIPTION**	
	LOCATION	**PAD-C**
	DATE	**5/6/2022 Update 16/07/2022**
	DISTANCE	**5.3 km**

	Detail (รายละเอียด)	Hazard description (รายละเอียดของอันตราย)	Initial Risk ความเสี่ยงก่อนควบคุม						Mitigation & Control Planning (มาตรการควบคุม)	Residual Risk ความเสี่ยงหลังหลังควบคุม						Status สถานะ	Tatget date กำหนดแล้วเสร็จ	Action By รับผิดชอบโดย	Remark หมายเหตุ
			People	Assest	Env.	Reputation	Frequency	Risk		People	Assest	Env.	Reputation	Frequency	Risk				
22	Equipments on location obstruct drilling operation อุปกรณ์ในพื้นที่ขัดขวางการดำเนินการขุดเจาะ 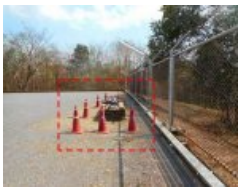	-Property damage อุปกรณ์เสียหาย	3	3	2	2	B	M	Remove equipments on this area out of location ขนย้ายอุปกรณ์ออกจากพื้นที่ Remove concrete bund from this area. รื้อถอนแนวคอนกรีตออกจากพื้นที่	1	1	1	1	B	L	Complete	Before rig move	Construction	

PTTEP	**LOCATION SURVEY DESCRIPTION**	
	LOCATION	**PAD-C**
	DATE	**5/6/2022 Update 16/07/2022**
	DISTANCE	**5.3 km**

	Detail (รายละเอียด)	Hazard description (รายละเอียดของอันตราย)	Initial Risk ความเสี่ยงก่อนควบคุม						Mitigation & Control Planning (มาตรการควบคุม)	Residual Risk ความเสี่ยงหลังหลังควบคุม						Status สถานะ	Tatget date กำหนดแล้วเสร็จ	Action By รับผิดชอบโดย	Remark หมายเหตุ
			People	Assest	Env.	Reputation	Frequency	Risk		People	Assest	Env.	Reputation	Frequency	Risk				
23	No concrete pad and gutter for cement unit equipment. ไม่มีพื้นคอนกรีตและรางระบายน้ำในพื้นที่ติดตั้ง cement unit 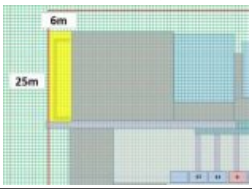	-Waste water spill to the ground ของเสียจากการขุดเจาะรั่วไหลลงสู่พื้นดิน	3	1	3	3	B	M	Make concrete pad in the location with gutter around at yellowed area for cement unit. ทำพื้นคอนกรีตและรางระบายน้ำ บริเวณพื้นที่สีเหลือง สำหรับ cement unit	1	1	1	1	B	L	Complete	Before rig move	Construction	
24	No concrete pad and gutter for rig equipment. ไม่มีพื้นคอนกรีตและรางระบายน้ำในพื้นที่ติดตั้งอุปกรณ์แท่นเจาะ 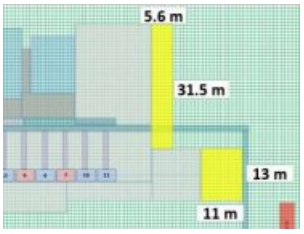	-Waste water spill to the ground ของเสียจากการขุดเจาะรั่วไหลลงสู่พื้นดิน	3	1	3	3	B	M	Make concrete pad in the location with gutter around at yellowed areas for rig equipment. ทำพื้นคอนกรีตและรางระบายน้ำ บริเวณพื้นที่สีเหลือง สำหรับติดตั้งอุปกรณ์แท่นเจาะ	1	1	1	1	B	L	incomplete	Before rig move	Construction	

PTTEP	**LOCATION SURVEY DESCRIPTION**	
	LOCATION	**PAD-C**
	DATE	**5/6/2022 Update 16/07/2022**
	DISTANCE	**5.3 km**

	Detail (รายละเอียด)	Hazard description (รายละเอียดของอันตราย)	Initial Risk ความเสี่ยงก่อนควบคุม						Mitigation & Control Planning (มาตรการควบคุม)	Residual Risk ความเสี่ยงหลังหลังควบคุม						Status สถานะ	Tatget date กำหนดแล้วเสร็จ	Action By รับผิดชอบโดย	Remark หมายเหตุ
			People	Assest	Env.	Reputation	Frequency	Risk		People	Assest	Env.	Reputation	Frequency	Risk				
25	Found the tree obstruct the flare area. พบต้นไม้กีดขวางการติดตั้งปล่องไฟ 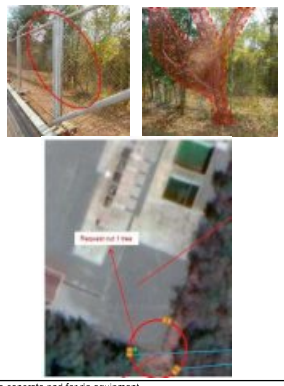	-Property damage อุปกรณ์เสียหาย	3	3	2	2	B	M	Cut the tree from this area for securing flare stack. ตัดต้นไม้ออกจากพื้นที่ เพื่อใช้งานในการยึด flare stack	1	1	1	1	B	L	incomplete	Before rig move	Construction	
26	No concrete pad for rig equipment. ไม่มีพื้นคอนกรีตในพื้นที่ติดตั้งอุปกรณ์แท่นเจาะ 	-Waste water spill to the ground ของเสียจากการขุดเจาะรั่วไหลลงสู่พื้นดิน	3	1	3	3	B	M	Make concrete pad in the location at rad areas for rig equipment. ทำพื้นคอนกรีต บริเวณที่สีแดง สำหรับติดตั้งอุปกรณ์แท่นเจาะ	1	1	1	1	B	L	Complete	Before rig move	Construction	

PTTEP	**LOCATION SURVEY DESCRIPTION**	
	LOCATION	**PAD-C**
	DATE	**5/6/2022 Update 16/07/2022**
	DISTANCE	**5.3 km**

	Detail (รายละเอียด)	Hazard description (รายละเอียดของอันตราย)	Initial Risk ความเสี่ยงก่อนควบคุม						Mitigation & Control Planning (มาตรการควบคุม)	Residual Risk ความเสี่ยงหลังหลังควบคุม						Status สถานะ	Tatget date กำหนดแล้วเสร็จ	Action By รับผิดชอบโดย	Remark หมายเหตุ
			People	Assest	Env.	Reputation	Frequency	Risk		People	Assest	Env.	Reputation	Frequency	Risk				
27	Route from Well pad-B to Well pad-C เส้นทางจาก Well pad-B ไปยัง Well pad-C 	-Road accident อุบัติเหตุทางถนน	3	3	2	2	B	M	Follow the route ไปตามเส้นทางที่กำหนดไว้	1	1	1	1	B	L	incomplete	Before rig move	Transportation team	
28	Start from Well pad-B then go straight เส้นทางออกจาก Well pad-B และตรงไป 	-Road accident อุบัติเหตุทางถนน	3	3	2	2	B	M	Follow the route ไปตามเส้นทางที่กำหนดไว้	1	1	1	1	B	L	incomplete	Before rig move	Transportation team	

	LOCATION SURVEY DESCRIPTION
LOCATION	PAD-C
DATE	5/6/2022 Update 16/07/2022
DISTANCE	5.3 km

	Detail (รายละเอียด)	Hazard description (รายละเอียดของอันตราย)	Initial Risk ความเสี่ยงก่อนควบคุม						Mitigation & Control Planning (มาตรการควบคุม)	Residual Risk ความเสี่ยงหลังหลังควบคุม						Status สถานะ	Tatget date กำหนดแล้วเสร็จ	Action By รับผิดชอบโดย	Remark หมายเหตุ
			People	Assest	Env.	Reputation	Frequency	Risk		People	Assest	Env.	Reputation	Frequency	Risk				
29	At 2.1 km, Turn right ณ 2.1 กิโลเมตร โค้งขวา 	-Road accident อุบัติเหตุทางถนน	3	3	2	2	B	M	Follow the route ไปตามเส้นทางที่กำหนดไว้	1	1	1	1	B	L	incomplete	Before rig move	Transportation team	
30	At 2.2 km, Turn left ณ 2.2 กิโลเมตร โค้งซ้าย 	-Road accident อุบัติเหตุทางถนน	3	3	2	2	B	M	Follow the route ไปตามเส้นทางที่กำหนดไว้	1	1	1	1	B	L	incomplete	Before rig move	Transportation team	
31	At 2.3 km, Go down hill ณ 2.3 กิโลเมตร ทางลงเขา 	-Road accident อุบัติเหตุทางถนน	3	3	2	2	B	M	Follow the route ไปตามเส้นทางที่กำหนดไว้	1	1	1	1	B	L	incomplete	Before rig move	Transportation team	

	LOCATION SURVEY DESCRIPTION
LOCATION	PAD-C
DATE	5/6/2022 Update 16/07/2022
DISTANCE	5.3 km

	Detail (รายละเอียด)	Hazard description (รายละเอียดของอันตราย)	Initial Risk ความเสี่ยงก่อนควบคุม						Mitigation & Control Planning (มาตรการควบคุม)	Residual Risk ความเสี่ยงหลังหลังควบคุม						Status สถานะ	Tatget date กำหนดแล้วเสร็จ	Action By รับผิดชอบโดย	Remark หมายเหตุ
			People	Assest	Env.	Reputation	Frequency	Risk		People	Assest	Env.	Reputation	Frequency	Risk				
32	At 2.3 km, Turn left ณ 2.3 กิโลเมตร โค้งซ้าย 	-Road accident อุบัติเหตุทางถนน	3	3	2	2	B	M	Follow the route ไปตามเส้นทางที่กำหนดไว้	1	1	1	1	B	L	incomplete	Before rig move	Transportation team	
33	At 2.7 km, Turn right ณ 2.7 กิโลเมตร โค้งขวา 	-Road accident อุบัติเหตุทางถนน	3	3	2	2	B	M	Follow the route ไปตามเส้นทางที่กำหนดไว้	1	1	1	1	B	L	incomplete	Before rig move	Transportation team	
34	Road damaged at 3.3 km. from Well pad-B to Well pad-C ถนนชำรุดบริเวณ กิโลเมตรที่ 3.3 จาก Well pad-B ไปยัง Well pad-C 	-Road accident อุบัติเหตุทางถนน -Property damage อุปกรณ์เสียหาย	3	3	2	2	B	M	Repair damaged road and re-compact. ซ่อมแซมถนนที่เสียหายและบดอัด	1	1	1	1	B	L	Complete	Before rig move	Construction	

PTTEP	LOCATION SURVEY DESCRIPTION	
	LOCATION	PAD-C
	DATE	5/6/2022 Update 16/07/2022
	DISTANCE	5.3 km

	Detail (รายละเอียด)	Hazard description (รายละเอียดของอันตราย)	Initial Risk ความเสี่ยงก่อนควบคุม						Mitigation & Control Planning (มาตรการควบคุม)	Residual Risk ความเสี่ยงหลังหลังควบคุม						Status สถานะ	Tatget date กำหนดแล้วเสร็จ	Action By รับผิดชอบโดย	Remark หมายเหตุ
			People	Assest	Env.	Reputation	Frequency	Risk		People	Assest	Env.	Reputation	Frequency	Risk				
35	At 3.6 km, Go up hill ณ 3.6 กิโลเมตร ทางขึ้นเขา 	-Road accident อุบัติเหตุทางถนน	3	3	2	2	B	M	Follow the route ไปตามเส้นทางที่กำหนดไว้	1	1	1	1	B	L	incomplete	Before rig move	Transportation team	
36	Road damaged at 3.7 km. from Well pad-B to Well pad-C ถนนชำรุดบริเวณ กิโลเมตรที่ 3.7 จาก Well pad-B ไปยัง Well pad-C 	-Road accident อุบัติเหตุทางถนน -Property damage อุปกรณ์เสียหาย	3	3	2	2	B	M	Repair damaged road and re-compact. ซ่อมแซมถนนที่เสียหายและบดอัด	1	1	1	1	B	L	Complete	Before rig move	Construction	

PTTEP	LOCATION SURVEY DESCRIPTION	
	LOCATION	PAD-C
	DATE	5/6/2022 Update 16/07/2022
	DISTANCE	5.3 km

	Detail (รายละเอียด)	Hazard description (รายละเอียดของอันตราย)	Initial Risk ความเสี่ยงก่อนควบคุม						Mitigation & Control Planning (มาตรการควบคุม)	Residual Risk ความเสี่ยงหลังหลังควบคุม						Status สถานะ	Tatget date กำหนดแล้วเสร็จ	Action By รับผิดชอบโดย	Remark หมายเหตุ
			People	Assest	Env.	Reputation	Frequency	Risk		People	Assest	Env.	Reputation	Frequency	Risk				
37	Found tree branch lower than 5.5 m at 3.7 km from Well pad-B to Well pad-C พบกิ่งไม้ต่ำกว่า 5.5 เมตร กิโลเมตรที่ 3.7 จาก Well pad-B ไปยัง Well pad-C 	-Road accident อุบัติเหตุทางถนน -Property damage อุปกรณ์เสียหาย	3	3	2	2	B	M	Cut the tree branch to above 5.5 m ตัดกิ่งไม้ให้มีความสูงมากกว่า 5.5 เมตร	1	1	1	1	B	L	incomplete incomplete	Before rig move	Construction	
38	At3.9 km, Go down hill ณ 3.9 กิโลเมตร ทางลงเขา 	-Road accident อุบัติเหตุทางถนน	3	3	2	2	B	M	Follow the route ไปตามเส้นทางที่กำหนดไว้	1	1	1	1	B	L	incomplete	Before rig move	Transportation team	

PTTEP	LOCATION SURVEY DESCRIPTION	
	LOCATION	PAD-C
	DATE	5/6/2022 Update 16/07/2022
	DISTANCE	5.3 km

	Detail (รายละเอียด)	Hazard description (รายละเอียดของอันตราย)	Initial Risk ความเสี่ยงก่อนควบคุม						Mitigation & Control Planning (มาตรการควบคุม)	Residual Risk ความเสี่ยงหลังหลังควบคุม						Status สถานะ	Tatget date กำหนดแล้วเสร็จ	Action By รับผิดชอบโดย	Remark หมายเหตุ
			People	Assest	Env.	Reputation	Frequency	Risk		People	Assest	Env.	Reputation	Frequency	Risk				
39	Found tree branch lower than 5.5 m at 4.2 km from Well pad-B to Well pad-C พบกิ่งไม้ต่ำกว่า 5.5 เมตร กิโลเมตรที่ 4.2 จาก Well pad-B ไปยัง Well pad-C 	-Road accident อุบัติเหตุทางถนน -Property damage อุปกรณ์เสียหาย	3	3	2	2	B	M	Cut the tree branch to above 5.5 m ตัดกิ่งไม้ให้มีความสูงมากกว่า 5.5 เมตร	1	1	1	1	B	L	incomplete	Before rig move	Construction	
40	At 4.3 km, Turn left ณ 4.3 กิโลเมตร โค้งซ้าย 	-Road accident อุบัติเหตุทางถนน	3	3	2	2	B	M	Follow the route ไปตามเส้นทางที่กำหนดไว้	1	1	1	1	B	L	incomplete	Before rig move	Transportation team	

PTTEP	LOCATION SURVEY DESCRIPTION	
	LOCATION	PAD-C
	DATE	5/6/2022 Update 16/07/2022
	DISTANCE	5.3 km

	Detail (รายละเอียด)	Hazard description (รายละเอียดของอันตราย)	Initial Risk ความเสี่ยงก่อนควบคุม						Mitigation & Control Planning (มาตรการควบคุม)	Residual Risk ความเสี่ยงหลังหลังควบคุม						Status สถานะ	Tatget date กำหนดแล้วเสร็จ	Action By รับผิดชอบโดย	Remark หมายเหตุ
			People	Assest	Env.	Reputation	Frequency	Risk		People	Assest	Env.	Reputation	Frequency	Risk				
41	At 4.5 km, Go up hill ณ 4.5 กิโลเมตร ทางขึ้นเขา 	-Road accident อุบัติเหตุทางถนน	3	3	2	2	B	M	Follow the route ไปตามเส้นทางที่กำหนดไว้	1	1	1	1	B	L	incomplete	Before rig move	Transportation team	
42	At 4.6 km, Go down hill ณ 4.6 กิโลเมตร ทางลงเขา 	-Road accident อุบัติเหตุทางถนน	3	3	2	2	B	M	Follow the route ไปตามเส้นทางที่กำหนดไว้	1	1	1	1	B	L	incomplete	Before rig move	Transportation team	
43	Road damaged at 5.2 km. from Well pad-B to Well pad-C ถนนชำรุดบริเวณ กิโลเมตรที่ 5.2 จาก Well pad-B ไปยัง Well pad-C 	-Road accident อุบัติเหตุทางถนน -Property damage อุปกรณ์เสียหาย	3	3	2	2	B	M	Repair damaged road and re-compact. ซ่อมแซมถนนที่เสียหายและบดอัด	1	1	1	1	B	L	Complete	Before rig move	Construction	

เอกสารแนบ 1-11

เอกสารตรวจสอบและบำรุงรักษาเครื่องจักร

Time เวลา	Organized by ผู้เตรียมการ	Inspected by ผู้ตรวจ	Monitored by ผู้สังเกต
Weekly รายสัปดาห์	Mechanic เมคคานิค	Crane Operator คนขับเครน	Toolpusher ทูลพุชเชอร์

CRANE CHECKLIST

Crane Checklist Instructions :

Prior to initial use, all new and altered cranes should be inspected to determine if any safety hazards exist. Thereafter, inspections should be performed at intervals according to the following list. Some components require daily inspection, while others need only be checked on a monthly basis. A complete inspection should also include observation during operation to detect any defects that might appear between regular inspections.

Rig No.	Locationพื้นที่	Type of Crane ชนิดเครน	Crane Capacity - Tons พิกัดน้ำหนัก (ตัน)	Main Hoist Capacity - Tons พิกัดน้ำหนักรอกใหญ่ (ตัน)	Auxiliary Hoist Capacity - Tons พิกัดน้ำหนักรอกเล็ก (ตัน)
GW221	Well Pad C	Truck crane	50.5 T	23.5T	4T

Place a √ or X in the box of "satisfied" according to the inspection result. เติมเครื่องหมาย √ หรือ X

NO. ลำดับที่	Items อุปกรณ์	Details รายละเอียด	Satisfied or not ยอมรับ หรือไม่	Requiring attention ความต้องการอื่นๆ
1	Controls and operating mechanisms ระบบควบคุม	Controls and operating mechanisms ระบบควบคุม	√	
2	Lines, Tanks, Valves, and Other Parts in Air or Hydraulic Systems ท่อ, แทงค์, วาล์ว และส่วนอื่นๆของ ระบบลมและระบบไฮดรอลิค	Deterioration or Leakage การเสื่อมสภาพ หรือ รั่วไหล	√	
3	Hooks ตะขอ	Deformed or Cracked ผิดรูป หรือ แตกหัก Safety Clips in Poor Condition เซฟตี้คลิปชำรุด Third-Party Crack Inspection มีการตรวจสอบโดยหน่วยงานภายนอกหรือไม่	√	
4	Signal alarm (light/Sound) สัญญาณเตือน (แสง/เสียง)	Move the crane in a backward direction. Does the reverse alarm make a loud sound to indicate to anyone in the proximity of the equipment that it is moving in a backward direction? ทดลองถอยหลัง	√	
5	Ropes, Reeling and End Connections สลิง, รอก และจุดเชื่อมต่อ	Excessive Wear, Twist, Stretch, Kinks, or Broken Wires สลิงสึก, บิด, ยืด, งอ หรือแตก	√	
6	Gear guard/ engine guard การ์ดครอบเครื่องยนต์	Guards Improperly adjusted, Missing or Broken การ์ดใส่ไม่ถูกต้อง, สูญหาย หรือแตกหัก	√	
7	Tires ยาง	Inflation and Condition สภาพไม่ดีหรือบวม	√	
8	Outriggers ขาช้าง	Locking Devices and General Condition Foundation and Cribbing อุปกรณ์ล็อคและสภาพทั่วไป	√	
9	Fire Extinguisher ถังดับเพลิง	Missing or Discharged สูญหายหรือไม่พร้อมใช้งาน	√	
10	Cab Windows หน้าต่างประตู	Broken or Missing แตกหรือสูญหาย	√	

11	Lubrication ระบบหล่อลื่น	Engine Oil Level and Moving Crane Parts ระดับน้ำมันเครื่องและชิ้นส่วนที่เคลื่อนที่	✓	
12	Boom and Crane Structure บูมและโครงสร้างเครน	Bent or Twisted Parts งอหรือบิด Broken Welds, Cracks, Heavy Rust รอยเชื่อมแตก, ร้าว หรือเป็นสนิม	✓	
14	Sheaves and Drums รอกและดรั้ม	Excessive Wear, Cracks สึกหรอหรือร้าว	✓	
15	Brake Systems ระบบเบรก	Move the crane forward and apply the brakes. Move the crane backward and apply the brakes. Do the brakes perform adequately in both the forward and backward movement? ทดลองเบรกขณะเดินหน้าและถอยหลัง	✓	
16	Load Indicators หน้าจอแสดงผล	Significant Inaccuracy แสดงค่าถูกต้อง	✓	
17	Other components อุปกรณ์อื่นๆ	Loose, Excessive Wear, Distortion, Cracks หลวม สึกหรอ ผิดรูป หรือร้าว	✓	

Signature of Operator คนขับ[redacted]

Signature of Mechanic เมค[redacted]

Signature of Toolpusher ทูล[redacted]

Date วันที่: [redacted]

เอกสารแนบ 2 ระยะดำเนินการ

เอกสารแนบ 2-1

แบบแปลนของโครงสร้างภายในโครงการ

ค่าพิกัดสถานีผลิตก๊าซ

จุด	พิกัดละติจูด & ลองติจูด		UTM (WGS84)	
	N	E	N	E
A	16°40'28.1"	102°46'41.8"	1,844,862.75	263,058.30
B	16°40'37.2"	102°46'41.0"	1,845,142.82	263,037.71
C	16°40'41.2"	102°46'41.7"	1,845,265.58	263,059.83
D	16°40'56.2"	102°51'30.9"	1,845,633.07	271,635.40
E	16°40'40.0"	102°46'35.1"	1,845,230.86	262,863.81

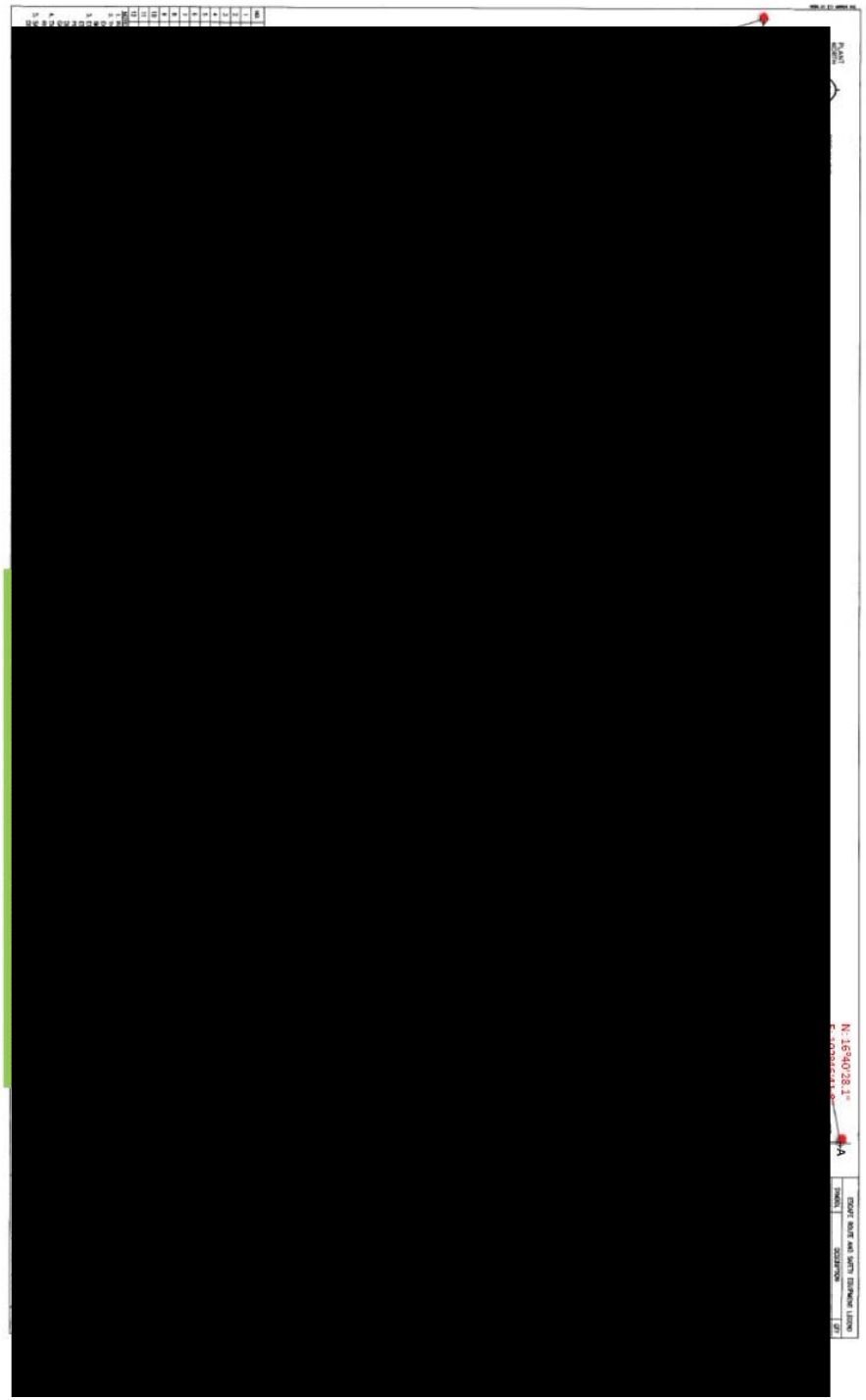

ค่าพิกัดฐานผลิต เอ

จุด	พิกัดละติจูด & ลองติจูด		UTM (WGS84)	
	N	E	N	E
A	17° 04' 48.8"	102° 42'38.2"	1,889,859.91	256,359.95
B	17° 04' 52.9"	102° 42'38.2"	1,889,985.98	256,361.43
C	17° 04' 53.3"	102° 42'35.2	1,889,999.33	256,272.85
D	17° 04' 48.9"	102° 42'35.0"	1,889,864.10	256,265.35
E	17° 04' 48.4"	102° 42'36.2"	1,889,848.30	256,300.66
F	17° 04' 48.3"	102° 42'36.5"	1,889,845.13	256,309.49
G	17° 04' 48.2"	102° 42'37.9"	1,889,841.56	256,350.86
H	17° 04' 48.7"	102° 42'37.0"	1,889,857.25	256,324.43

ค่าพิกัดฐานผลิต บี

จุด	พิกัดละติจูด & ลองติจูด		UTM (WGS84)	
	N	E	N	E
A	17°06' 13.6"	102°43'07.7"	1,892,457.26	257,262.93
B	17°06' 13.5"	102°43'04.0"	1,892,455.47	257,153.48
C	17°06' 12.9"	102°43'04.0"	1,892,163.59	257,129.36
D	17°06' 12.9"	102°43'03.3"	1,892,437.26	257,132.57
E	17°06' 12.4"	102°43'03.0"	1,892,421.99	257,123.52
F	17°06' 12.3"	102°43'02.3"	1,892,419.23	257,096.87
G	17°06' 11.8"	102°43'02.1"	1,892,403.85	257,096.69
H	17°06' 11.9"	102°43'02.9"	1,892,406.65	257,120.38
I	17°06' 10.6"	102°43'03.3"	1,892,366.54	257,131.74
J	17°06' 10.6"	102°43'04.8"	1,892,366.02	257,176.09
K	17°06' 10.7"	102°43'04.8"	1,892,369.09	257,176.13
L	17°06' 10.8"	102°43'05.7"	1,892,371.86	257,202.78
N	17°06' 11.2"	102°43'07.7"	1,892,383.46	257,262.07
M	17°06' 10.9"	102°43'05.7"	1,892,374.93	257,202.82

ค่าพิกัดฐานผลิต ซี

จุด	พิกัดละติจูด & ลองติจูด		UTM (WGS84)	
	N	E	N	E
A	17°07' 15.4"	102°42'01.3"	1,894,380.72	255,321.88
B	17°07' 21.2"	102°42'02.3"	1,894,558.72	255,353.55
C	17°07' 22.1"	102°41'59.9"	1,894,587.23	255,282.92
D	17°07'16.8"	102°41'58.5"	1,894,424.75	255,239.60

ค่าพิกัดฐานผลิต ดี

พิกัดละติจูด & ลองติจูด		UTM (WGS84)	
N	E	N	E
17°09' 39.7"	102°42'40.7"	1,898,804.20	256,539.13
17°09' 40.9"	102°42'50.6"	1,898,837.65	256,832.23
17°04' 40.8"	102°42'54.5"	1,898,833.22	256,947.48
17°09' 39.0"	102°42'45.0"	1,898,781.18	256,666.00
17°09' 38.1"	102°42'48.0"	1,898,752.46	256,754.36
17°09' 37.9"	102°42'46.6"	1,898,746.79	256,712.90

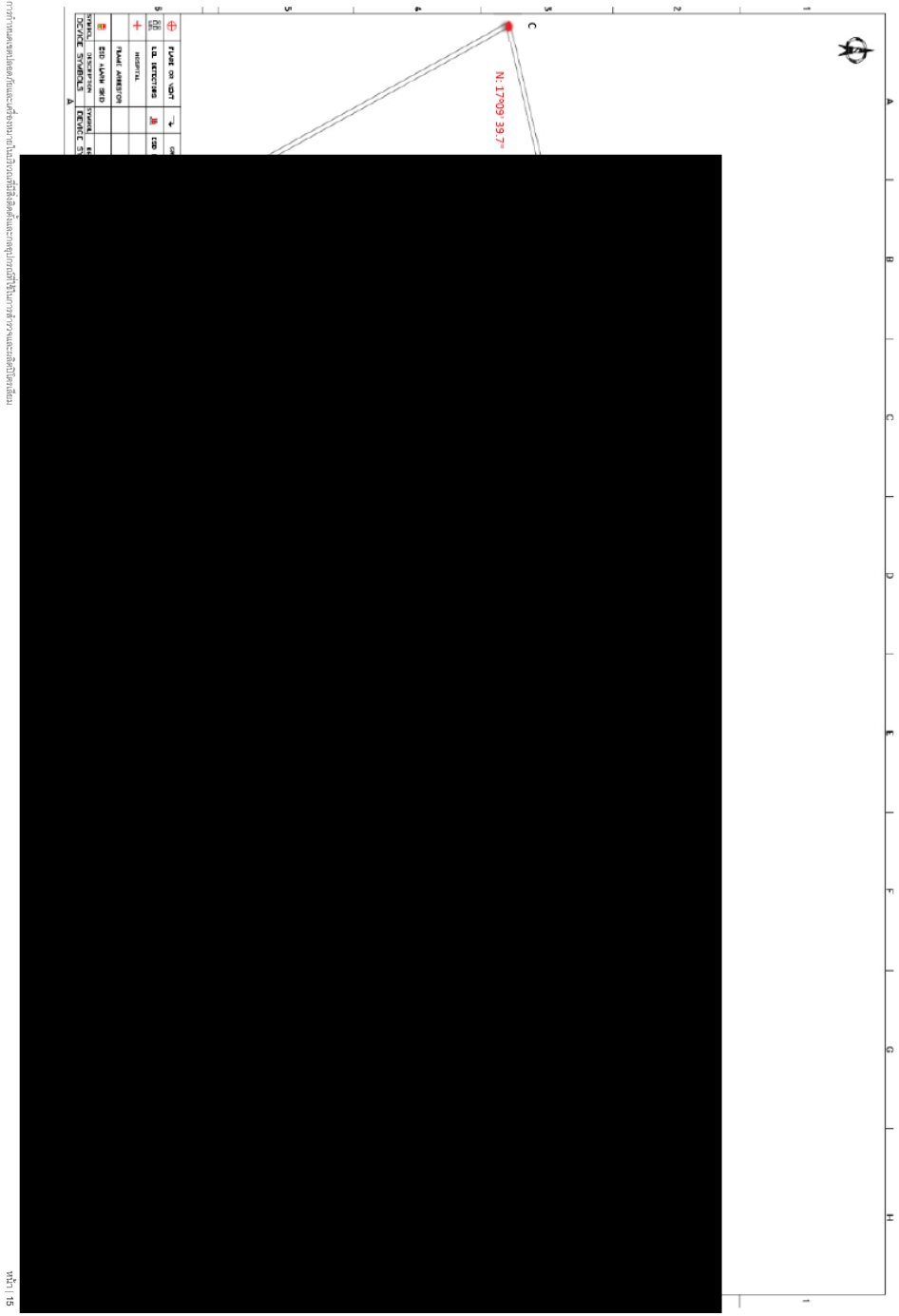

ค่าพิกัดสถานีควบคุมแรงดันก๊าซที่ 1

พิกัดละติจูด & ลองติจูด		UTM (WGS84)	
N	E	N	E
16°55'17.5"	102°42'44.2"	1,872,290.57	256,332.20
16°55'17.2"	102°42'43.6"	1,872,281.55	256,314.33
16°55'17.6"	102°42'43.3"	1,872,293.95	256,305.60
16°55'18.2"	102°42'43.8"	1,872,312.23	256,320.61

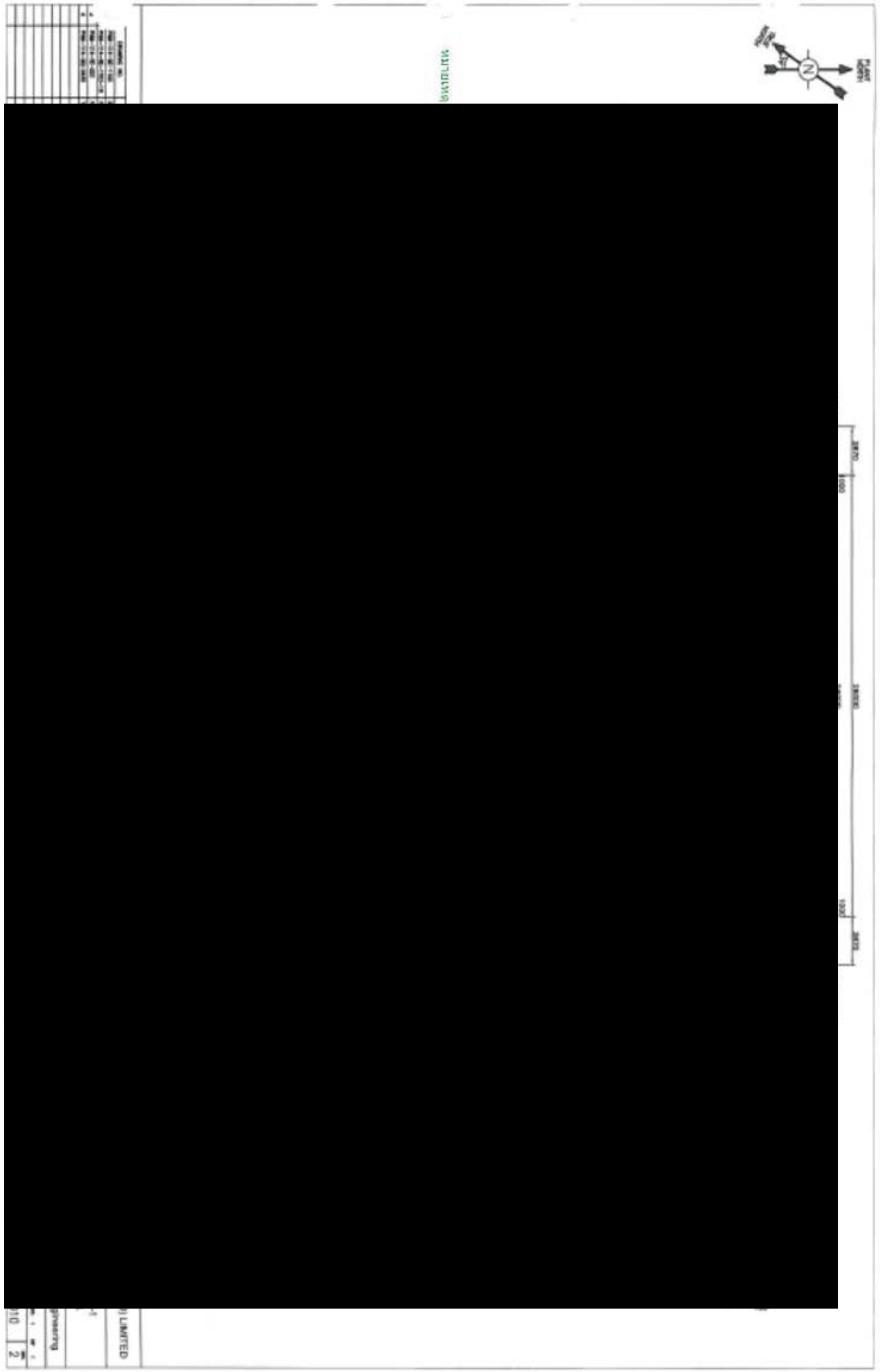

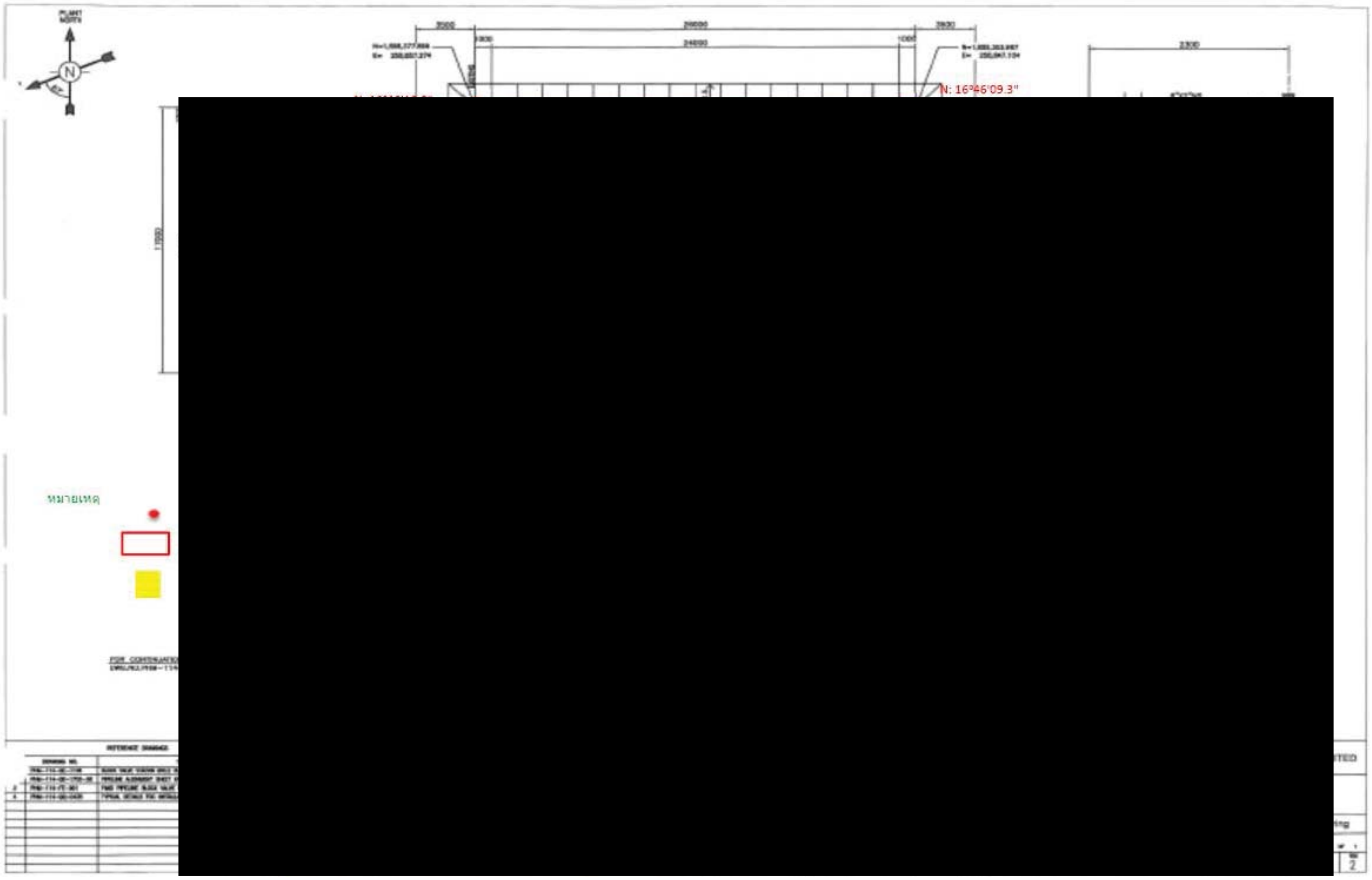

ค่าพิกัดสถานีควบคุมแรงดันก๊าซที่ 2

จุด	พิกัดละติจูด & ลองติจูด		UTM (WGS84)	
	N	E	N	E
A	16°46'09.3"	102°39'44.7"	1,855,495.80	250,819.59
B	16°46'10.0"	102°39'45.1"	1,855,517.19	250,831.69
C	16°46'10.3"	102°39'44.5"	1,855,526.62	250,814.02
D	16°46'09.6"	102°39'44.1"	1,855,505.23	250,801.92

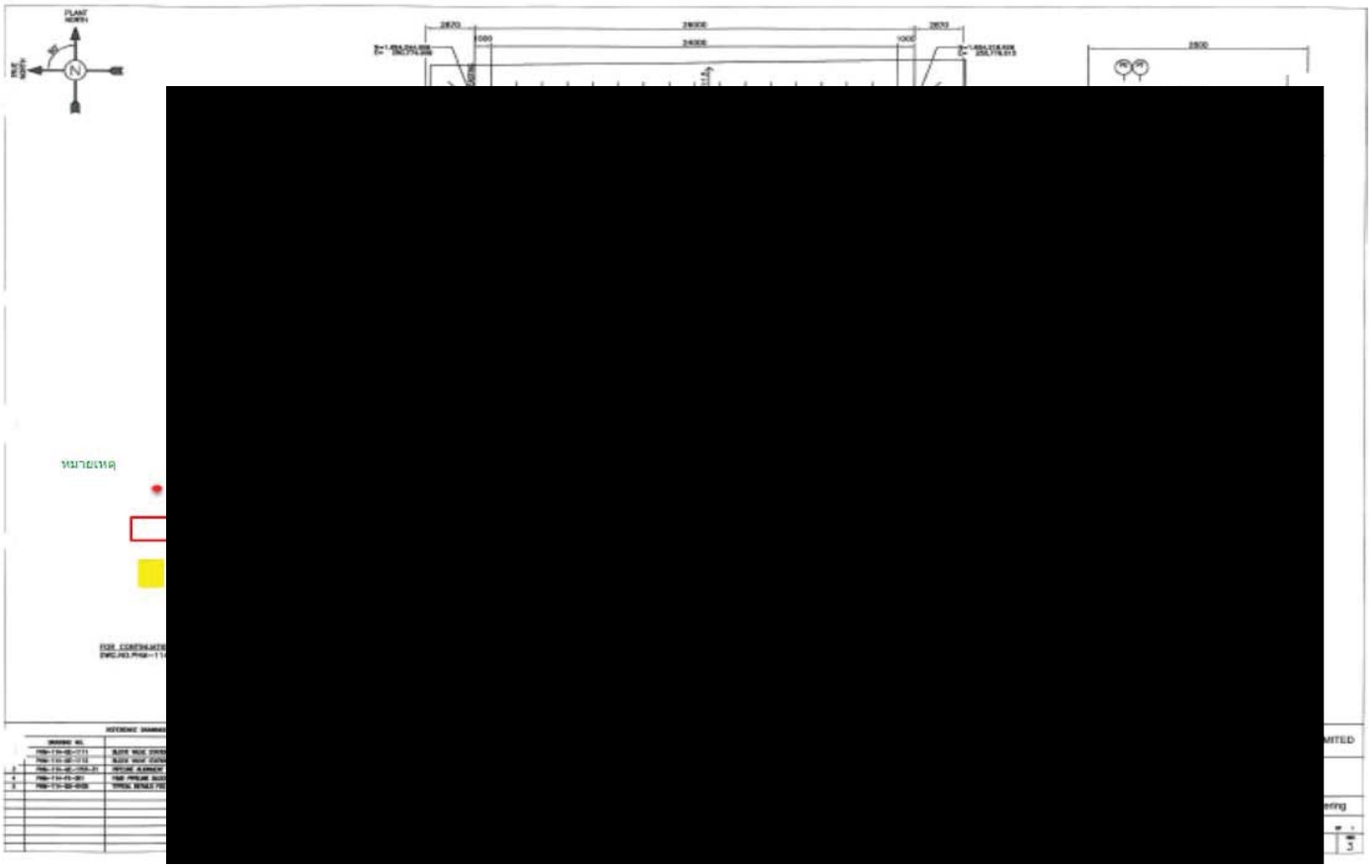

ค่าพิกัดสถานีควบคุมแรงดันก๊าซที่ 3

จุด	พิกัดละติจูด & ลองติจูด		UTM (WGS84)	
	N	E	N	E
A	16°46'32.4"	102°39'42.5"	1,856,206.89	250,762.78
B	16°46'33.2"	102°39'42.7"	1,856,231.42	250,769.00
C	16°46'33.2"	102°39'42.3"	1,856,231.56	250,757.15
D	16°46'32.3"	102°39'42.2"	1,856,203.92	250,753.86

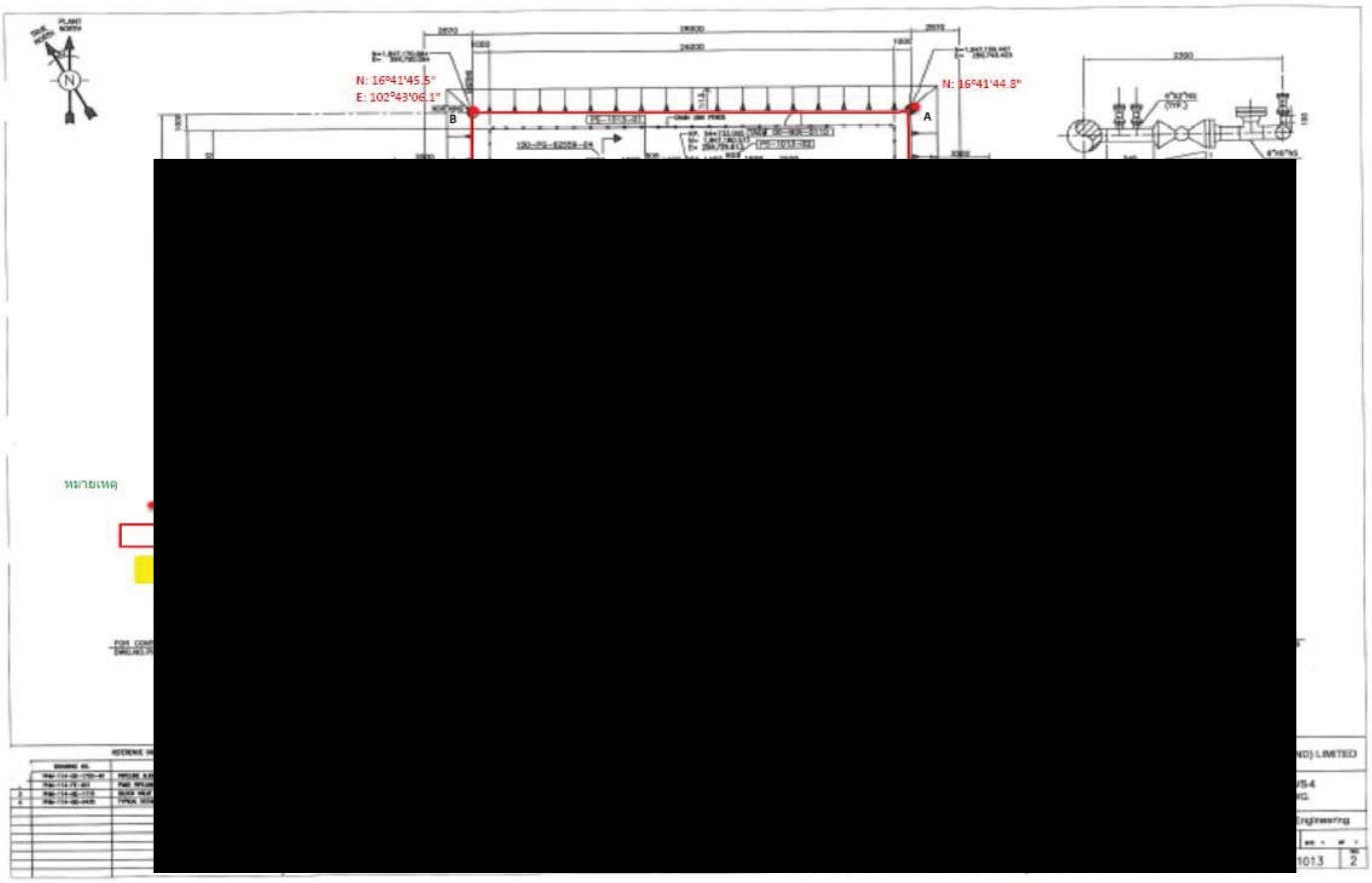

ค่าพิกัดสถานีควบคุมแรงดันก๊าซที่ 4

พิกัดละติจูด & ลองติจูด		UTM (WGS84)	
N	E	N	E
16°41'45.5"	102°43'06.1"	1,847,314.83	256,692.75
16°41'44.8"	102°43'07.6"	1,847,292.80	256,736.95
16°41'44.5"	102°43'03.8"	1,847,284.86	256,624.24
16°41'44.8"	102°43'06.1"	1,847,293.31	256,692.50

เอกสารแนบ 2-2

แบบแปลนของถังคอนเดนเสท

Transmittal Serial No.: 325
Date: 31 MAR 2006

Technip

HESS

AMERADA HESS (THAILAND) LIMITED

PHU HORM GAS DEVELOPMENT PROJECT

DOCUMENT NO. : 2002-DS-2520-01

DOCUMENT TITLE : MECH. DATA SHEET FOR CONDENSATE STORAGE TANKS

EQUIPMENT NO. : 115-02-T-001 A/B

No. of pages of Attachment, as follows:							Page 1 of 4
Attachment No.	A	B					
No. of Pages	3	1					
0	29-Ma[redacted]						PPROVED FOR CONSTRUCTION
C	21-Mar-06	Dusadee W. / Prasert V.	Sastry N.	Teerachate K.			RE-ISSUED FOR APPROVAL
B	6-Jan-06	Dusadee W. / Prasert V.	Somnath M./ Brad K.	Thomas P.			ISSUED FOR APPROVAL
A	4-Oct-05	Dusadee W. / Prasert V.	Brad K.	Thomas P.			ISSUED FOR APPROVAL
Rev.	Date	Originator	Checked By	Approved By	Approved By Client		Status

All information in this document is confidential and proprietary of Technip Engineering (Thailand) Ltd. No unauthorized copying is allowed. All rights reserved.

REVISION	DESCRIPTION	PREPARED	CHECKED	APPROVED	DATED
A	ISSUED FOR APPROVAL	Dusadee W. / Prasert V.	Brad K.	Thomas P.	4-Oct-05
B	ISSUED FOR APPROVAL	Dusadee W. / Prasert V.	Somnath M. / Brad K.	Thomas P.	6-Jan-06
C	ISSUED FOR APPROVAL	Dusadee W. / Prasert V.	Sastry N.	Teerachate K.	21-Mar-06
0	APPROVED FOR CONSTRUCTION	Dusadee W. / Prasert V.	Sastry N.	Teerachate K. For	29-Mar-06

1	**DESIGN DATA**						
2	DESIGN CODE	API 650		FLANGE FACE FINISH	SMOOTH FINISHED		
3	CLIENT SPECIFICATION	PHM-120-MS-006		INSPECTION	THIRD PARTY		
4	DESIGN PRESSURE : MAX./MIN.	0.056 / -0.006	bar g	LOCAL AUTHORITY	-		
5	DESIGN TEMP. : MAX./MIN.	95	°C	POSTWELD HEAT TREATMENT	N/A		
6	OPERATING PRESSURE	ATM	bar g	RADIOGRAPHY EXAM.	AS PER API 650		
7	OPERATING TEMP. : MAX./ MIN.	54 / 34	°C	MAGNETIC PARTICLE	ACC TO SPEC		
8	FLUID CONTENTS	5%Vol Aromatics		DYE PENETRANT	ACC TO SPEC		
9	DENSITY OF CONTENT @ OPERATION	730	kg/m³	ULTRASONIC	ACC TO SPEC		
10	DENSITY AT TEMPERATURE	15	°C	IMPACT TESTS	NO		
11	FLAMMABLE / TOXIC	YES		HYDRO TEST (*)	FULL OF WATER +0.056 bar g		
12	SOUR SERVICE	YES		CORROSION ALLOWANCE	1.6		
13	EMERGENCY VENTING	NO (NOTE 8)		SHELL THICKNESS (MIN.)	(*)	mm	
14	EARTHQUAKE LOADING	N/A		ROOF THICKNESS (MIN.)	(*)	mm	
15	DESIGN WIND PRESS. (Wind Speed)	36	m/s	BOTTOM THICKNESS (MIN.)	(*)	mm	
16	ORIENTATION	VERTICAL		WORKING / NOMINAL CAPACITY	517 / 645	m³	
17	TANK HEIGHT	9,800	mm	TANK INTERNALS (List) & ACCESSORIES (if any) :-			
18	INSIDE DIAMETER (I.D.)	9,144	mm	NORMAL FILLING FLOW RATE	35	m³/h	
19	TYPE OF ROOF	CONE ROOF		MAX. FILLING FLOW RATE	120	m³/h	
20	ROOF SLOPE	1:6	(*)	NORMAL DRAW-OFF FLOW RATE	73	m³/h	
21	TYPE OF BOTTOM	CONE UP		MAX. DRAW-OFF FLOW RATE	80	m³/h	
22	BOTTOM SLOPE	1:100					
23	TANK FOUNDATION	(NOTE 2)					
24							
25							
26	**MATERIAL SPEC. & SUPPLY (ASTM)**						
27	TANK SHELL	A283 Gr. C		LIFTING LUGS (ON PAD)	SS 400		
28	ROOF / BOTTOM PLATE	A283 Gr. C		EXTERNAL CLEATS	SS 400		
29	NOZZLE NECK PLATE (FOR DIA.>24")	A283 Gr. C		INSULATION SUPPORTS / RING	N/A		
30	NOZZLE NECK PIPE	A106 Gr.B		EXTERNAL BOLTS / NUTS	A193 Gr. B7 / A194 Gr. 2H (NOTE3)		
31	NOZZLE FITTINGS	A234 WPB		GASKETS FOR NOZZLE	COMPRESSED FIBRE (NON ABS)		0
32	NOZZLE FLANGE / BLIND (EXT)	A105		GASKETS FOR MANHOLE	SPIRAL WOUND (NOTE6)		
33	REINFORCING PADS	A283 Gr. C		INTERNAL BOLTING	SS 304		
34	STIFFENING RINGS/ WIND GIRDER	A36 or Equiv.		FOUNDATION BOLTS / NUTS	A307 Gr. B		
35	ROOF RAFTER	A36 or Equiv.		INTERNAL PIPES	A106 Gr.B		
36	GIRDER	-		SPIRAL STAIRS	SS 400		
37	COLUMN	-		TOP PLATFORM	SS 400		
38	ANCHOR CHAIR	SS 400		NAME PLATE	SS 316		
39	EXTERNAL FLOATING ROOF	N /A		EARTHING BOSSES (2 NOS)	SS 304		
40	INTERNAL FLOATING ROOF	N /A					
41							
42							
43	**WEIGHTS (ESTIMATED) - (*) to be confirmed by VENDOR**						
44	FABRICATED WEIGHT	34,500	(*) kg	WEIGHT OF INTERNALS / INSTRUMENT	N/A	kg	
45	FLOATING ROOF WEIGHT	N/A	kg	WEIGHT OF ATTACHMENT	2000	(*) kg	
46	OPERATING WEIGHT	414,000	(*) kg				
47	TEST WEIGHT	735,500	(*) kg				
48	**PROTECTIVE COATING DATA**						
49	SURFACE PREPARATION - (INTERNAL)			SSPC SP5 or SA.3			
50	PAINTING - (INTERNAL)			Epoxy Novolac Interline 399			
51	SURFACE PREPARATION - (EXTERNAL)			HESS 3483-CO-SP-0002 SYSTEM 3			
52	PAINTING - (EXTERNAL)			HESS 3483-CO-SP-0002 SYSTEM 3			
53	INSULATION - (BY OTHERS)			N/A			
54	FIRE PROOFING - (BY OTHERS)			N/A			
55							

(*) - TO BE CONFIRMED BY VENDOR (**) - TO BE CONFIRMED DURING DESIGN STAGE

57	**NOZZLE DATA**									
58	MARK	NO. OFF	SERVICE	SIZE	SCH.	RATING	PROJ. FROM	TYPE	REMARK	
59				(DN)		ANSI B16.5	INSIDE OF TANK			
60	N1	1	*CONDENSATE INLET*	150	80	150 #	(NOTE 1)	WNRF		
61	N2	1	*CONDENSATE OUTLET*	200	80	150 #	(NOTE 1)	WNRF		
62	N3	1	*CONDENSATE RETURN*	80	160	150 #	(NOTE 1)	WNRF		
63	N6	1	*DRAIN*	80	160	150 #	(NOTE 1)	WNRF		
64										
65	K4	1	*SAMPLING CONNECTION*	50	160	150 #	(NOTE 1)	WNRF	Note 22	
66	K5	1	*SAMPLING CONNECTION*	50	160	150 #	(NOTE 1)	WNRF	Note 22	
67										
68										
69										
70										
71										
72	**INSTRUMENT CONNECTIONS**									
73										
74	N4	1	*FG BLANKETING*	80	80	150 #	(NOTE 1)	WNRF		
75	N5	1	*VAPOR REGULATING VALVE*	50	160	150 #	(NOTE 1)	WNRF		
76	N8	1	*BREATHER VALVE (PVRV)*	250	80	150 #	(NOTE 1)	WNRF		0
77	N9	1	*LT CONNECTION (02LT-105)*	150	160	150 #	(NOTE 1)	WNRF	Note 23	
78	N10	1	*LT CONNECTION (02LT-106)*	150	160	150 #	(NOTE 1)	WNRF	Note 23	
79										
80	K2A/K2B	2	*LG CONNECTION (02LG-103), (02LT-107)*	80	160	150 #	(NOTE 1)	WNRF		
	K1	1	*TI CONNECTION (02TG-108)*	50	160	150 #	(NOTE 1)	WNRF		
	K3	1	*PT CONNECTION (02PT-107)*	50	160	150 #	(NOTE 1)	WNRF		
81										
82	**MANWAY, INSPECTION HOLES ETC.**									
83	M1	1	*SHELL MANWAY C/W COVER*	600	PL.6t	PLATE-TYPE	STD	API-650		
84			*DAVIT ASSEMBLY & BOLTING*					TYPE		
85	M2	1	*ROOF MANWAY C/W COVER*	600	PL.6t	PLATE-TYPE	STD	API-650		
86			*DAVIT ASSEMBLY & BOLTING*					TYPE		
87										

88 **SKETCH:**

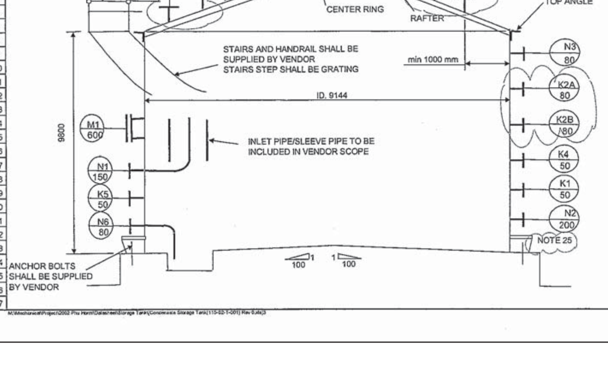

118		**NOTES**	
119			
120	(1)	Unless otherwise specified, the minimum requirement of nozzle projection shall be 150 mm;	
121		however the nozzle projection must have the space sufficient for removal the stud bolts through the back side	
122		of flange bolt holes, i.e. between the back of the flange and shell or insulation.	
123	(2)	Tank foundation shall be confirmed during design stage.	
124	(3)	All external stud bolts and nut shall be Phosphate and Teflon coated.	
125	(4)	Bolts holes for flange shall be straddle the horizontal and vertical center-line in elevation,	
126		and the North /South center lines in plan, unless otherwise stated.	
127	(5)	The nozzle neck shall be calculated in accordance with ASME code requirements, however minimum thickness	
128		requirements are as follows;	
129		NOMINAL PIPE SIZE — MIN. PIPE SCHEDULE	
130		50 to 80 — 160	
131		100 — 120	
132		150 to 250 — 80	
133		300 to 400 — 60	
134	(6)	Flange gaskets shall be spiral wound ASME B16.5, 4.4 mm thk, ASME B16.2 WND: 316 SS, CS outer ring, flex.	
135		Graphite (Flexicarb) filler (Flexitallic LS or equal) Low stress type. NACE MR0175- sour service.	
136	(7)	Surface preparation and the application of protective coating shall be in accordance with specification no.	
137		3483-CO-SP-001 and 3483-CO-SP-002. The coating shall be applied for external tank surface.	
138	(8)	The region at the junction of the shell and the roof shall be designed as a frangible joint.	
139	(9)	Size selection of the anchor bolt shall be design and supply by tank vendor. Vendor shall confirm size and	
140		length during designed stage.	
141	(10)	Vendor shall confirm tank loading data for design tank foundation. Tank foundation shall be provided by other party.	
142	(11)	Non-destructive examination (NDE) :	
143		The minimum requirement for NDE on welded joints shall be as per API 650 :-	
144		i) Spot radiography examination on main seams and tee-joints (as per API 650)	
145		ii) 100 % P.T. for welds and nozzle welds (including nozzle attachment welds)	
146		iii) Full visual inspection.	
147		iv) Vacuum test at roof and bottom plate as per API 650.	
148	(12)	The corrosion allowance stated on the tank data sheet shall be provided on all pressure parts including manways,	
149		nozzles, and welds in contact with process media with the following condition :	
150		i) Non-removable internals shall have full specified corrosion applied to both sides to ensure the element can	
151		withstand design loadings in the fully corroded condition.	
152		ii) One half of the specified corrosion allowance shall be applied to each exposed surface of non-corrosion	
153		resistant, removable internals.	
154		iii) Corrosion allowance shall not be applied to flange gasket faces.	
155	(13)	All nozzle necks shall be the seamless pipe except for the nozzle 24", which will be constructed using	
156		butt-welded rolled plate. The longitudinal welded seams shall have NDT testing, 100 % radiographic.	
157	(14)	All nozzles and manways shall be provided with a reinforced pad. Reinforcing pads shall be the same	
158		quality of steel as the shell and roof to which they are attached.	
159	(15)	Unless otherwise specified, the 1/4" API threaded tell-tale hole shall be provided in each section of the pad and	
160		grease plugged after air leak test and hydrostatic test.	
161	(16)	All reinforcing pads shall be pneumatically tested at a minimum pressure of 0.1 N/mm^2, using soap-suds	
162		solution, before stress relief and/or hydrotest.	
163	(17)	Completed fixed roof tanks shall be tested by filling the tank with water to height of 50mm above the top angle.	
164		If tank configuration limits the filling height, the tank shall be tested by filling water to the top of top angle or	
165		the bottom of any overflow.	
166	(18)	As tank is being filled with water, frequent inspections shall be made to detect leakage and or swelling.	
167		The minimum holding time for the water test shall be 12 hours after filling height is reached.	
168	(19)	Ladders, cages, stairs, platforms and handrails shall be hot-dip galvanized in accordance with ASTM A123.	
169	(20)	All flanged nozzles shall be designed to withstand the applied forces and bending moments of the attached	
170		piping as per API 650.	
171	(21)	Surface preparation and painting spec. for internal shall apply for 100% of internal surface	
172	(22)	Sample point should be equipped sample probe extended at least 150 mm inside the tank.	
173	(23)	Vendor shall locate level instrument nozzle on opposite side to inlet nozzle N1.	
174	(24)	For manhole API 650, flange gasket shall be compressed fibre (non-ABS or metal)	0
175	(25)	Vendor shall supply 2 earth lugs at the bottom of tank for grounding system and locate on opposite side include in	0
176		vendor scope.	0
177			
178			
179			
180			

Attachment A

page-1/3

FOR REFERENCE ONLY

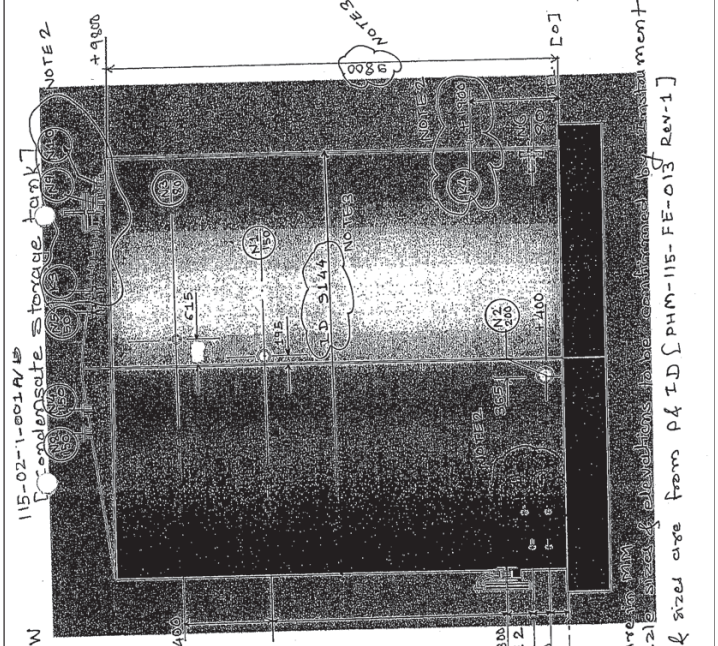

page 2/3

FOR REFERENCE ONLY

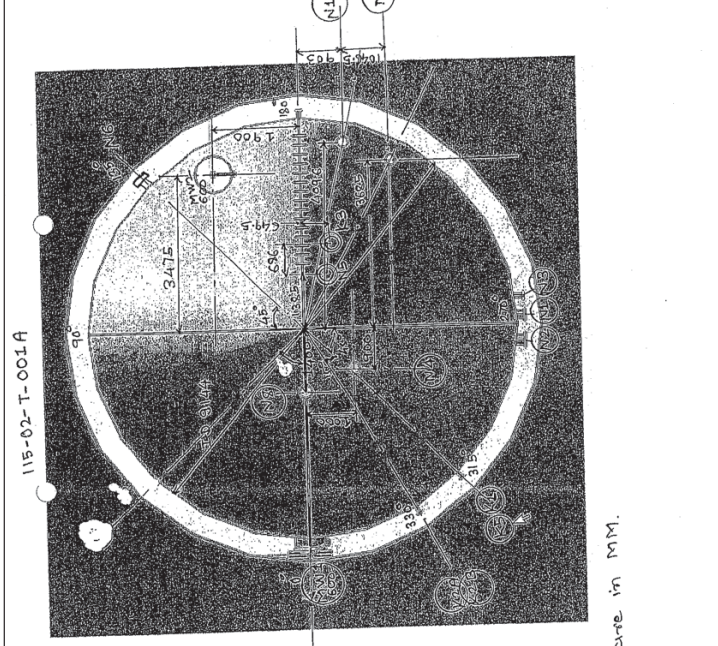

page 3/3

FOR REFERENCE ONLY

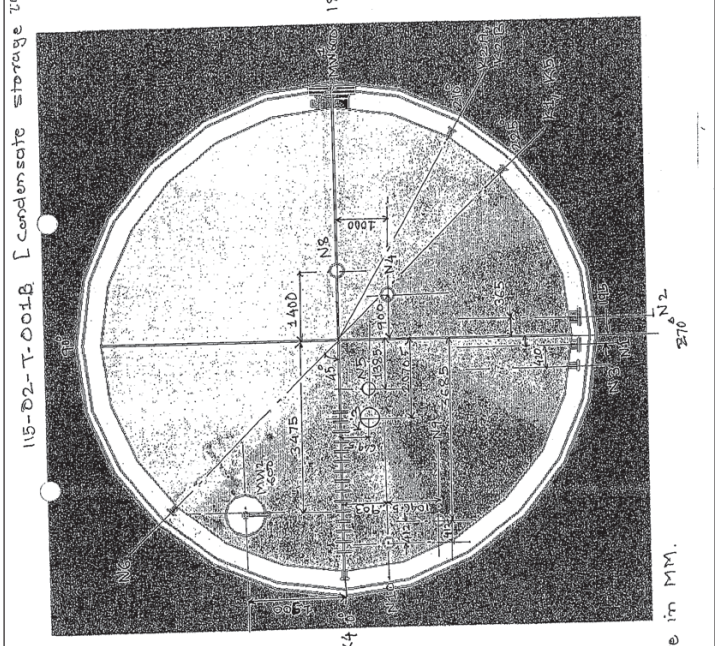

ATTACHMENT B

115-02-T-001A/B

FOR REFERENCE ONLY

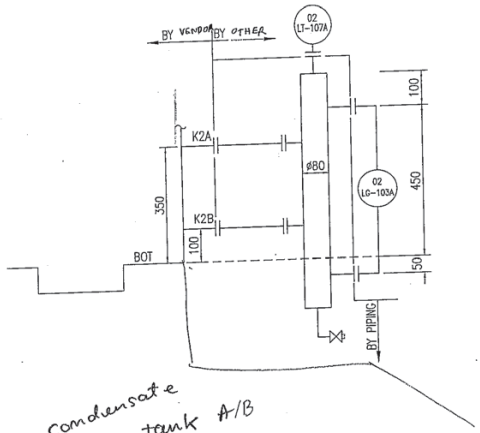

condensate storage tank A/B

K2A & K2B 80mm. FLANGE

Item	Tag	Instrument Type	C-C mm.	Visible Length (sec x size)	Mounted	Inst. Flanged Size
1	02-LG-103A	LEVEL GAUGE	400	302 (1x8)	SIDE-SIDE	20 mm.
2	02-LT-107A	GUIDED WAVE LEVEL TRANSMITTER	-	-	TOP MOUNTED	80 mm.

SCAN.

ORIGINAL

STECON

DOCUMENT TRANSMITTAL

Project	: Phuhorm Gas Development, Mechanical Work	Date	: 20-Jun-06
Owner	: Amerada Hess (Thailand) Limited	Ref. No.	: DT-M039
Client	: Technip Engineering (Thailand) Limited	Contract No.	: 2002-1300-01AMD.0

To : Mr. Colin Watson
Construction Manager

Subject : **Technical Data of Painting Materials for Condensate Storage Tank**

Dear Sir,
We have pleasure in submitting you herewith the following document(s) for :-

☐ Information ■ Approval ☐ Constructio ☐ Procurement
☐ Review & Comments ☐ Quotation ☐ Records ☐ Hand Over

Q'ty	Document No.	Rev. No.	Title
6	-	-	Technical Data of Painting Materials for Condensate Storage Tank

2002 PHU HORM GAS DEVELOPMENT

[redacted]

Attachment :
CC. :
File :
Received by :
Date :

TO STECON
Your request for approval(s) is :
( ) Returned for correction as noted and re-issue ( ) Approved ( ) Approved as noted
( ) Returned for acknowlegde and awaiting for approval later (see note)
Note :

Dusadee W.

SIGNATURE :
NAME :
DATE :

DISCIPLINES	APT	DATE
CIVIL		
STRUCTURAL		
PIPING		
COST ESTIMATE		
CIVIL - STRUCT.		
MECHANICAL (PIPING)		
MECHANICAL (HVAC)		
MECHANICAL (EQUIP)	✓	
ELECTRICAL		
PROCESS		
INSTRUMENT		
PROCUREMENT		
PROPOSAL		
APT	✓	

FILE : Ref. DT-M039

Print date: 20-06-06

STECON — Sino - Thai Engineering & Construction Public Company Limited

Project	: Phu Horm Gas Development Project, Udornthani, Thailand.		
Owner	: Amerada Hess Thailand Limited.	Job	: J-2298-2-M
Main Contractor	: Technip Engineering (Thailand) Ltd.	Date	: 20 June 2006
Contractor	: Sino - Thai Engineering & Construction Public Company Limited.	Contract No.	: 2002-1300-01 AMD. 0

Technical Data of Painting Materials for Condensate Storage Tank

(Tankguard Storage - Jotun Thailand Limited)

Jotun Paint Specification
CLIENT:Sino-Thai Engineering & Construction PCL.
Project :Phu Horm Gas Development
Paint specification for Hydrocarbon Waste Water Service

SPECIFICATION	JOTUN PRODUCT					
Generic Description	Product Name	VS %	DFT per coat	m²/l	liquid	m² unit
ALL PRODUCTS	Surface Preparation: Blast cleaning to sa 2.5					
Phenolic Epoxy	Tankguard Storage	63	125	5.04	18.90	94.75
Phenolic Epoxy	Tankguard Storage	63	125	5.04	18.90	94.75
Thinner	Jotun thinner No.23			3.79		
	Total Thickness	250	micron			

Jotun Thailand Limited.,
49/25 Moo12, Kingkaew Road, Rajatheva, Bangplee, Samutprakarn 10540
Tel (662) 750-3355 Fax (662) 750-3344 , 750-2930

JOTUN

Product Comparison

	Tankguard Storage	Interline 399
Product description	High solid phenolic epoxy coating	Epoxy novlac tank lining
Recommended use	Internal lining for the internal lining of storage tanks	Internal lining of storage vessels and process vessels
Temperature withstand	95c with crude oil immersed	95c
Volume solids	63%	67%
Colour	Light Red, Red	Limited
Gloss Level	Flat	Not applicable
Solvent Resistance	Excellent	Excellent
Recommended Thickness	100-200 microns dry	85-125 microns dry
Recommended Thickness	160-320 microns wet	127-187 microns wet
Theoritical Coverage	6.3 m2/ltr. at 100 microns	6.7 m2/ltr. at 100 microns
Method of Application	Airless spray, Brush for small area	Airless spray, Air Spray, Roller, Brush
Drying Time	at 35c	at 40c
- Surface Dry	2 hrs.	3 hrs.
- Dry to Handle	5 hrs.	6 hrs.
- Dry to Recoat(min)	5 hrs.	16 hrs.
- Dry to Recoat(max)	30 days	2 days
Surface Preparation required	Sa 2 1/2	Sa 2 1/2

Technical Data
TANKGUARD STORAGE

JOTUN

Product description
Tankguard Storage is a two-component, high solid phenolic epoxy coating with high resistance to a wide range of chemicals and solvents.

Recommended use
Corrosion protection for the internal lining of steel storage tanks being resistant to a wide range of chemicals including, but not limited to, crude oil and aromatic and aliphatic solvents and others.

Film thickness and spreading rate

	Minimum	Maximum	Typical
Film thickness, dry (µm)	100	200	125
Film thickness, wet (µm)	160	320	200
Theoretical spreading rate (m^2/l)	6.3	3.2	5

Physical properties

Colour	Light Red, Red
Solids (vol %)*	63 ± 2
Flash point	28°C ± 2 (Setaflash)
Gloss	Flat
Water resistance	Very good
Solvent resistance	Excellent
Chemical resistance	Excellent
Flexibility	Fair

*Measured according to ISO 3233:1998 (E)

Surface preparation

All surfaces should be clean, dry and free from contamination. The surface should be assessed and treated in accordance with ISO 8504.

Bare steel
Cleanliness: Blast cleaning to min. Sa 2 ½ (ISO 8501 1:1988). Roughness: using abrasives suitable to achieve Grade Medium G (50 - 85 µm, Ry5) (ISO 8503-2).

Coated surfaces
Approved on top of thin coat (50 µm) of Tankguard HB

Other surfaces
The coating may be used on other substrates. Please contact your local Jotun office for more information.

Condition during application
The temperature of the substrate should be minimum 15°C and at least 3°C above the dew point of the air. The temperature and the relative humidity should be measured in the vicinity of the substrate. Good ventilation is usually required in confined areas to ensure proper drying. The coating should not be exposed to oil, chemicals or mechanical stress until fully cured.

Application methods

Spray	Use airless spray
Brush	Recommended for stripe coating and small areas, care must be taken to achieve the specified dry film thickness.

Application data

Mixing ratio (volume)	6,5 parts Comp. A (base) to be mixed thoroughly with 1 part Comp. B (curing agent)
Induction time	20 minutes.
Pot life (23°C)	4 hours (Reduced at higher temp.)
Thinner/Cleaner	Jotun Thinner No. 23
Guiding data airless spray	
Pressure at nozzle	15 MPa (150 kp/cm² 2100 psi)
Nozzle tip	0.46-0.69 mm (0.018-0.027")
Spray angle	40-80°
Filter	Check to ensure that filters are clean.

Drying time
Drying times are generally related to air circulation, temperature, film thickness and number of coats, and will be affected correspondingly. The figures given in the table are typical with:
* Good ventilation (Outdoor exposure or free circulation of air)
* Typical film thickness
* One coat on top of inert substrate

Substrate temperature	**15°C**	**23°C**	**40°C**
Surface dry	12 h	4 h	2 h
Through dry	20 h	10 h	4 h
Cured	14 d	7 d	3 d
Dry to recoat, minimum	20 h	10 h	4 h
Dry to recoat, maximum [1]	30 d	30 d	30 d

1. The surface should be free from chalking and contamination prior to application. If the maximum dry to recoat time is exceeded, please contact Jotun Protective Coatings for advice.

The given data must be considered as guidelines only. The actual drying time/times before recoating may be shorter or longer, depending on film thickness, ventilation, humidity, underlying paint system, requirement for early handling and mechanical strength etc. A complete system can be described on a system sheet, where all parameters and special conditions could be included.

Typical paint system

Tankguard Storage **2 x 125 µm** **(Dry Film Thickness)**

Other systems may be specified, depending on area of use

Storage
The product must be stored in accordance with national regulations. Storage conditions are to keep the containers in a dry, cool, well ventilated space and away from source of heat and ignition.Containers must be kept tightly closed.

Handling
Handle with care. Stir well before use.

Packing size
20 litre unit: 16.3 litres Comp. A (base) in a 20 litre container and 2.5 litres Comp. B (curing agent) in a 3 litre container
Packing may vary from country to country according to local requirements.

Health and safety
Please observe the precautionary notices displayed on the container. Use under well ventilated conditions. Do not breathe or inhale mist. Avoid skin contact. Spillage on the skin should immediately be removed with suitable cleanser, soap and water. Eyes should be well flushed with water and medical attention sought immediately.

For detailed information on the health and safety hazards and precautions for use of this product, we refer to the Material Safety Data Sheet.

DISCLAIMER
The information in this data sheet is given to the best of our knowledge based on laboratory testing and practical experience. However, as the product is often used under conditions beyond our control, we cannot guarantee anything but the quality of the product itself. We reserve the right to change the given data without notice.

Head Office & Nordic
Jotun A/S
P.O. Box 2021
N-3248 Sandefjord
Norway
Phone +47 33 45 70 00
Fax +47 33 46 46 13

Europe
Jotun Paints (Europe) Ltd.
Stather Road, Flixborough
North Lincolnshire DN15 8RR
United Kingdom
Phone +44 172 44 00 000
Fax +44 172 44 00 100

Middle East
Jotun U.A.E Ltd. LLC.
Al Quoz Industrial Area
P.O Box 3671
Dubai U.A.E
Phone +971 4 3 39 50 00
Fax +971 4 3 38 06 66

South East Asia
Jotun (Singapore) Pte. Ltd.
No 11-15, Sixth Lok Yang Road
Jurong
Singapore 628 111
Phone +65 6265 4711
Fax +65 6265 7484

Jotun is a World Wide company with factories, sales offices and stocks in more than 50 countries. For your nearest local Jotun address please contact the nearest regional office or visit our website at www.jotun.com

ISSUED 14 FEBRUARY 2002 BY JOTUN
THIS DATA SHEET SUPERSEDES THOSE PREVIOUSLY ISSUED

PDF Version :
☐

JOTUN
Jotun Paints

สีจ๊วตัน
สีจ๊วตัน

Sino-Thai Engineering & Construction PCL.
29th Fl., Sino-Thai Tower.
32/59 Asoke Rd.,
Bangkok 10110

23 June 2006

Attn : K. Denphong Srirach

Dear K. Denphong.

Jotun Thailand Limited would like to confirm that **Tankguard Storage** can withstand with crude oil temperature at 95c and we would like to recommend the paint system as follows:

1st coat : Tankguard Storage 125 microns
2nd coat : Tankguard Storage 125 microns

For your consideration.

Your sincerely,
JOTUN THAILAND LIMITED

Rujirek Ork-weha
Sales Manager. Proterctive

DOCUMENT TRANSMITTAL

Project	: Phuhorm Gas Development, Mechanical Work	Date	: 12-Jul-06
Owner	: Amerada Hess (Thailand) Limited	Ref. No.	: DT-M024
Client	: Technip Engineering (Thailand) Limited	Contract No.	: 2002-1300-01AMD.0
		Rev	: 2

To : Mr. Colin Watson
Construction Manager

Subject : **Shop Drawing for Condensate Storage Tank (REV 3).**

Dear Sir,
We have pleasure in submitting you herewith the following document(s) for :-

☐ Information ☐ Approval ☐ Constructior ☐ Procurement
☒ Review & Comments ☐ Quotation ☐ Records ☐ Hand Over

Q'ty	Document No.	Rev. No.	Title
1	-	2	Drawing List
7	-	2	Shop Drawing for Condensate Storage Tank 115-02-T-001 A(REV 3).
1	-	2	Drawing List
7	-	2	Shop Drawing for Condensate Storage Tank 115-02-T-001 B(REV 3).

Attachment : 16 Sheet (s)
CC. :
File :
Received by : JT
Date : 13 / 07 / 06

Yours Faithfully,

Denphong Srirach
Construction Manager

TO STECON
Your request for approval(s) is :
[ ] Returned for correction as noted and re-issue [ ] Approved [ ] Approved as noted
[ ] Returned for acknowlegde and awaiting for approval later (see note)
Note :

SIGNATURE :
NAME :
DATE :

SINO - THAI ENGINEERING & CONSTRUCTION PUBLIC COMPANY LIMITED

Ref. No. : DT-M024 Rev.2

DRAWING LIST

No.	Drawing No.	Rev No.	Sheets.	Size.	Page.
1	115-02-T-001 B	3	1 of 7	A3	1
2	115-02-T-001 B	3	2 of 7	A3	1
3	115-02-T-001 B	3	3 of 7	A3	1
4	115-02-T-001 B	3	4 of 7	A3	1
5	115-02-T-001 B	3	5 of 7	A3	1
6	115-02-T-001 B	3	6 of 7	A3	1
7	115-02-T-001 B	3	7 of 7	A3	1

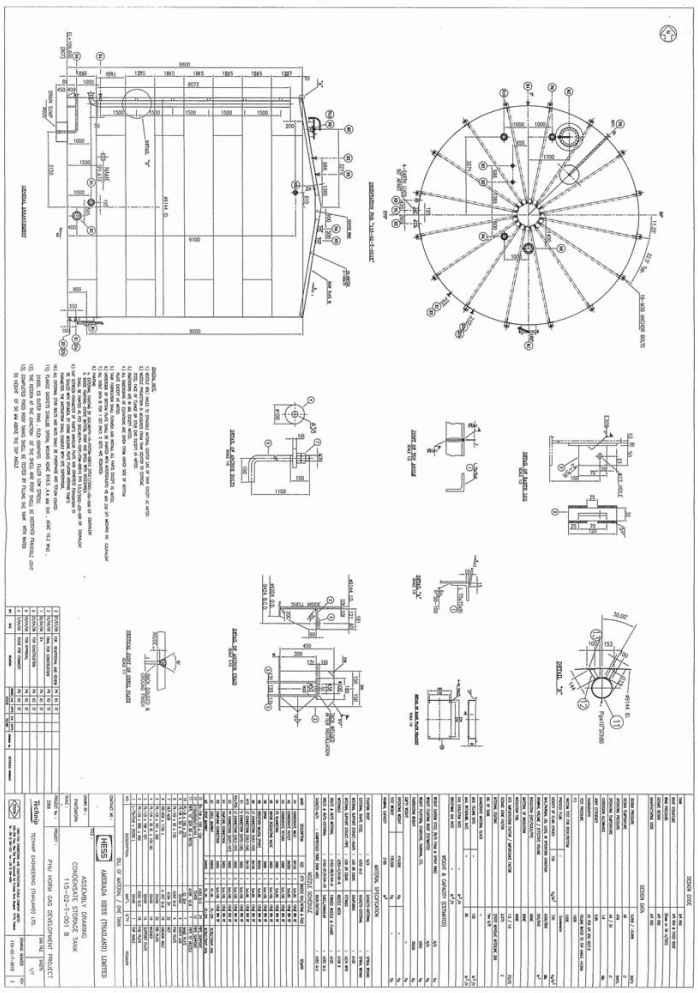

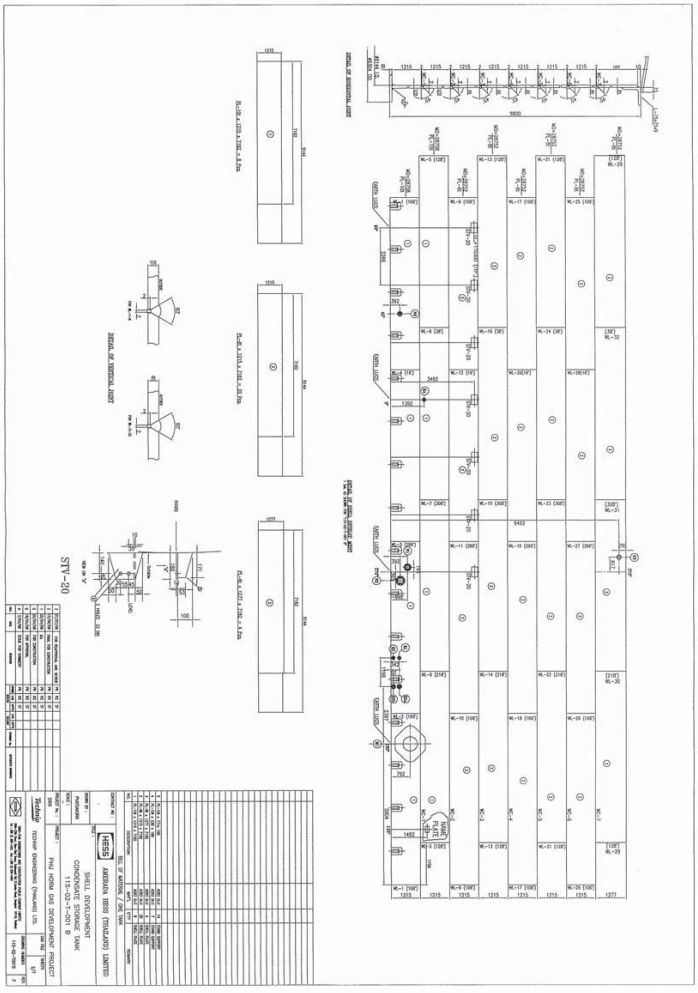

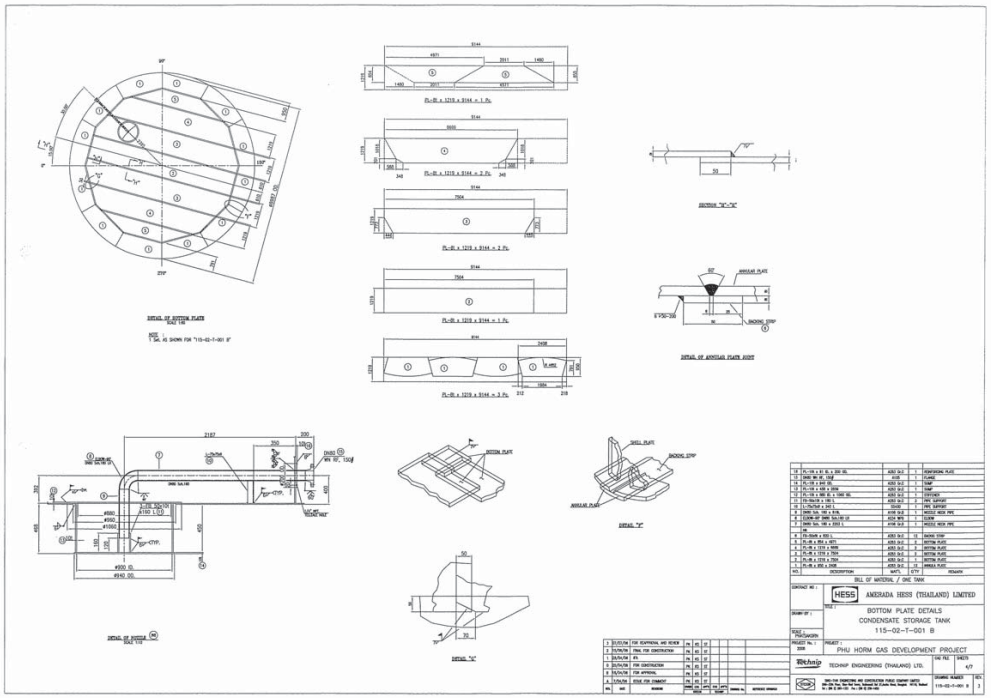
BILL OF MATERIAL / DWG TANK
AMERADA HESS (THAILAND) LIMITED
BOTTOM PLATE DETAILS
CONDENSATE STORAGE TANK
115-02-T-001 B
PHU HORM GAS DEVELOPMENT PROJECT
TECHNIP ENGINEERING (THAILAND) LTD.

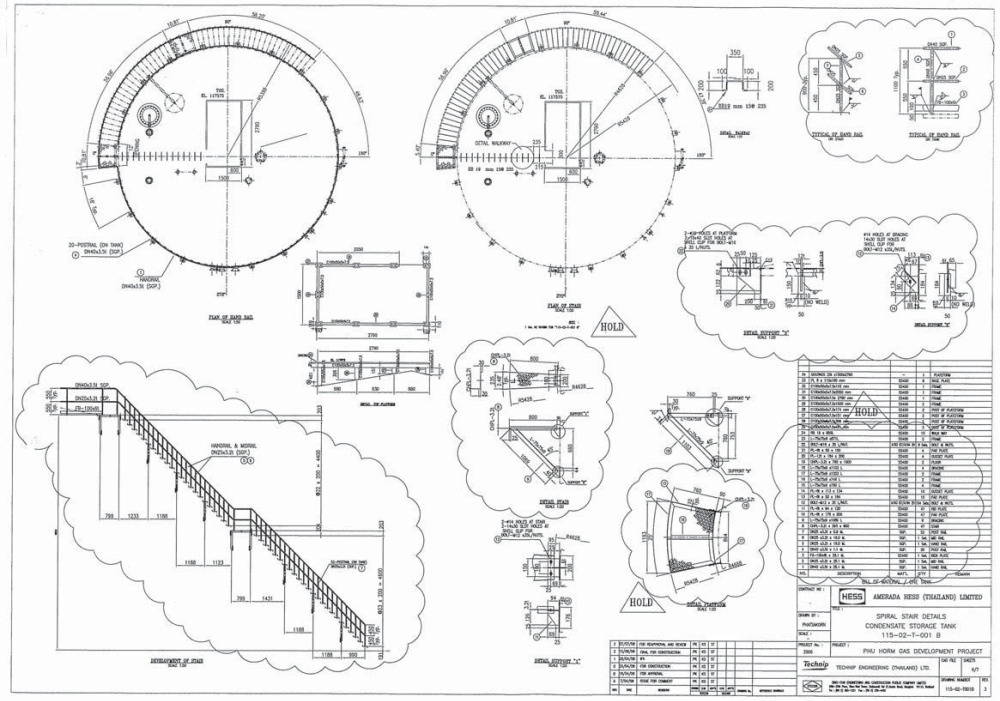
HOLD
BILL OF MATERIAL / DWG TANK
AMERADA HESS (THAILAND) LIMITED
SPIRAL STAIR DETAILS
CONDENSATE STORAGE TANK
115-02-T-001 B
PHU HORM GAS DEVELOPMENT PROJECT
TECHNIP ENGINEERING (THAILAND) LTD.

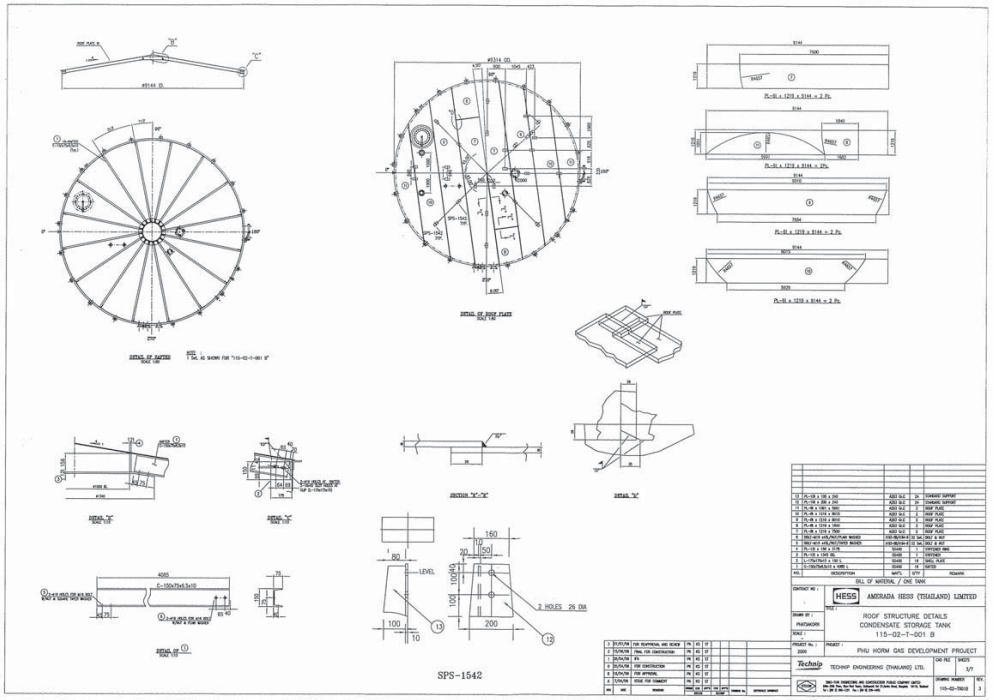
SPS-1542
BILL OF MATERIAL / DWG TANK
AMERADA HESS (THAILAND) LIMITED
ROOF STRUCTURE DETAILS
CONDENSATE STORAGE TANK
115-02-T-001 B
PHU HORM GAS DEVELOPMENT PROJECT
TECHNIP ENGINEERING (THAILAND) LTD.

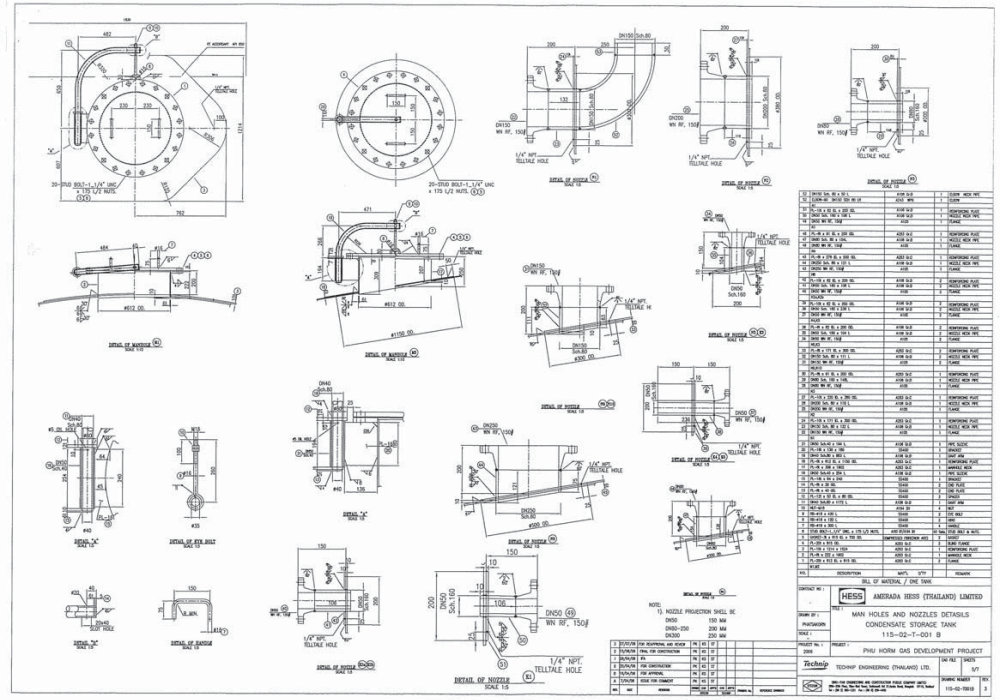
BILL OF MATERIAL / DWG TANK
AMERADA HESS (THAILAND) LIMITED
MAN HOLES AND NOZZLES DETASILS
CONDENSATE STORAGE TANK
115-02-T-001 B
PHU HORM GAS DEVELOPMENT PROJECT
TECHNIP ENGINEERING (THAILAND) LTD.

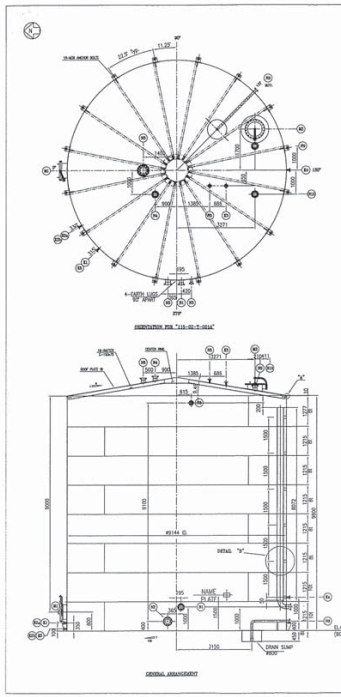

DESIGN CODE

TANK	API 650
ROOF STRUCTURE	API 650 & FIXED ROOF
WIND PRESSURE	(Zone as 30 m/SEC)
STORE DESIGN	API 650
MANUFACTURING CODE	API 650

DESIGN DATA

DESIGN PRESSURE		0.098 / -0.098	(kg/c)
DESIGN TEMPERATURE		65	C
OPERATING PRESSURE		ATM	(kPG)
OPERATING TEMPERATURE		34 / 34	C
CORROSION ALLOWANCE		1.6	MM
JOINT EFFICIENCY		0.85	
HYDROTESTED		AS PER API 650 SECT.5	
TEST PRESSURE		FILLING WATER TO TOP ANGLE +0.098	
P.V.V.		1000	
VACUUM TEST FOR ROOF/BOTTOM		1500	
PROCESS FLUID		Condensate	
DENSITY OF FLUID STORED	1130	kg/m³	750 kg/m³
WIN_PRESSURE (IN LEVEL IN OPERATING CONDITION)		0.00/1000	MM
ANNUAL VOLUME / STORTIME VOLUME		300/MM	m³
REGULATION (VOTCOLS/PV)		API650	
MATERIAL OF REGULATION		API650	
REGULATION TYPE		API650	
SEIS IMPORTANCE FACTOR / IMPORTANCE FACTOR		1.0 / 1.0	(S/I)
SEISMIC ZONE FACTOR		0.0375	Z
MATERIAL STORING		DIESEL MATERIAL 300	
MIL OF TANK		1mm 5/8	
SHARPNESS MATERIAL CLASS		-	
MIL_TOLERA (MIT)	-	1.00	m²/(A)
MIL_MATERIAL (MIT)	-	40	m²/(A)
SEC CORLOSION RATE	-	m²/yr	
MATERIAL GAS RATE	-	m²/yr	

WEIGHT & CAPACITY (ESTIMATED)

WEIGHT CARBON STEEL (W/O FOAM & SPRAY ONLY)				N/A	kg
WEIGHT FLOATING ROOF (ESTIMATED)				N/A	kg
WEIGHT MATERIAL (VARIABLE, HANDRAIL ETC)				2000	kg
OVERPRESSURE WEIGHT				2000	kg
EMPTY WEIGHT				-	kg
OPERATING WEIGHT	414,000	kg	-		kg
TEST WEIGHT	770,000	kg	-		kg
ANNUAL CAPACITY	2100	m³			

MATERIAL SPECIFICATION

FLOATING ROOF	: N/A	GASKETS-MATERIAL	: SPIRAL WOUND
EXTERNAL SHAPE STEEL	: ASTM A-36	GASKETS-EXTERNAL	: SPIRAL WOUND
MATERIAL SUPPORT STRUCT.-CHART	: ASTM A36 (ASTM)	FLOATGARD	: ASTM
MATERIAL SUPPORT STRUCT.-PIPE	: ASTM A53 (ASTM)	FITTINGS	: ASTM MPB
MATERIALS	: ASTM-A216/WCB-B	WEEDED WEDGE	: ASTM B
SEALS & NOZ. MATERIAL	: A105-RB/F304-B	FIXEDED WEDGE & FLANGE	: A105
SEALS & NOZ-MATERIAL	: A105-RB/F304-RB	BOLLARDLAR	: A350 Gr.C
GASKETS-ALTO	: COMPRESSED FIBRE (NON ASB)	BODY/BOTTOM	: A283 Gr.C

NOZZLE SCHEDULE

MARK	DESCRIPTION	SIZE	QTY	BASIC SEAL/NOMINAL & FACE	REMARKS
N1	CONDENSATE INLET	24"/10	1	SA-105	FF&F MM RF
N2	CONDENSATE OUTLET	24"/10	1	SA-105	FF&F MM RF
N3	CONDENSATE RETURN	24"/10	1	SA-105	FF&F MM RF
N4	TK BLANKETING	24"/10	1	SA-105	FF&F MM RF
N5	TANK BLANKETING INLET	24"/10	1	SA-105	FF&F MM RF
N6	DRAIN	24"/10	1	SA-105	FF&F MM RF
N7	DEDICATED VENTED (FIRE)	24"/10	1	SA-105	FF&F MM RF
N8	LC CONNECTION (SEC-1/2)	24"/10	1	SA-105	FF&F MM RF
N10	LC CONNECTION (SEC-1/2)	24"/10	1	SA-105	FF&F MM RF
N9	LC CONNECTION (SEC-1/2)	24"/10	1	SA-105	FF&F MM RF
N3A/N3B	LC CONNECTION (SEC-1/2)	24"/10	1	SA-105	FF&F MM RF
N4	FLOATING CONNECTION	24"/10	1	SA-105	FF&F MM RF
N4	FLOATING CONNECTION	24"/10	1	SA-105	FF&F MM RF
N5	CONTROL CONNECTION	24"/10	1	SA-105	FF&F MM RF
N7	LEVEL GAUGE	24"/10	1	N.-A.	N.-105 N/A/FLOAT.GAU
N7	LEVEL GAUGE	24"/10	1	N.-A.	N.-105 N/A/FLOAT.GAU
N1	CN/CN.A.SEL.A.CAN			A350 Gr.C	1 CARB SUPPORT
N1	CN/CN.A.SEL.A.CAN			A350 Gr.C	1 CARB SUPPORT
N1	CHAIN OF CONTACT WITH			ASTM A-36	1 CARB SUPPORT
N1	CN.A.SEL.A CON.A.CN.			SS 304	1 CARB PLATE
N1	CN.A.SEL.A CN.A.CN.			SS A36	4 CARTN CLAN
N1	CN.A.SEL.A CN.A.CN.			ASTM A-36	4 CARB PLATE
N1	CN.A.SEL.A			ASTM A-36	1 CARB
N1	CN.A.SEL.A CON.1			A 307 Gr.B	1 ANCHOR BOLT
N1	CN.A.SEL.A SEC.1 SEC			SS400	20 CARB PLATE
N1	CN.A.SEL.A SE.A.1 SEC CEL			SS400	10 WASHER
N1	CN.A.SEL.A SEC.1 SEC			SS400	10 SUPPORT PLATE
N1	CN.A.SEL.A SEC.A.1			A283 Gr.C	10 CARB PLATE
N1	CN.A.SEL.A SEC.A.1			A283 Gr.C	10 CARB PLATE
NO.	DESCRIPTION			MATL.	QTY REMARK

BILL OF MATERIAL / ONE TANK

CONTRACT NO : -
HESS AMERADA HESS (THAILAND) LIMITED
TITLE : ASSEMBLY DRAWING CONDENSATE STORAGE TANK 115-02-T-001 A
DRAWN BY : PHATSAKORN
SCALE :
PROJECT NO. : 2006
PROJECT : PHU HORM GAS DEVELOPMENT PROJECT
Technip TECHNIP ENGINEERING (THAILAND) LTD.
DWG FILE / SHEETS 1/7
DRAWING NUMBER 115-02-T001A
REV. 3

REV.	DATE	REVISION	DRAWN	CHK'D	APP'D	CLIENT APP'D	DRAWN No.	REFERENCE DRAWINGS
3	21/01/08	FOR RESUBMITTAL AND REVIEW	PN	KO	SF			
2	21/04/08	FINAL FOR CONSTRUCTION	PN	KO	SF			
1	28/04/08	IFA	PN	KO	SF			
0	20/04/08	FOR CONSTRUCTION	PN	KO	SF			
0	16/04/08	FOR APPROVAL	PN	KO	SF			
0	12/04/08	ISSUE FOR COMMENT	PN	KO	SF			

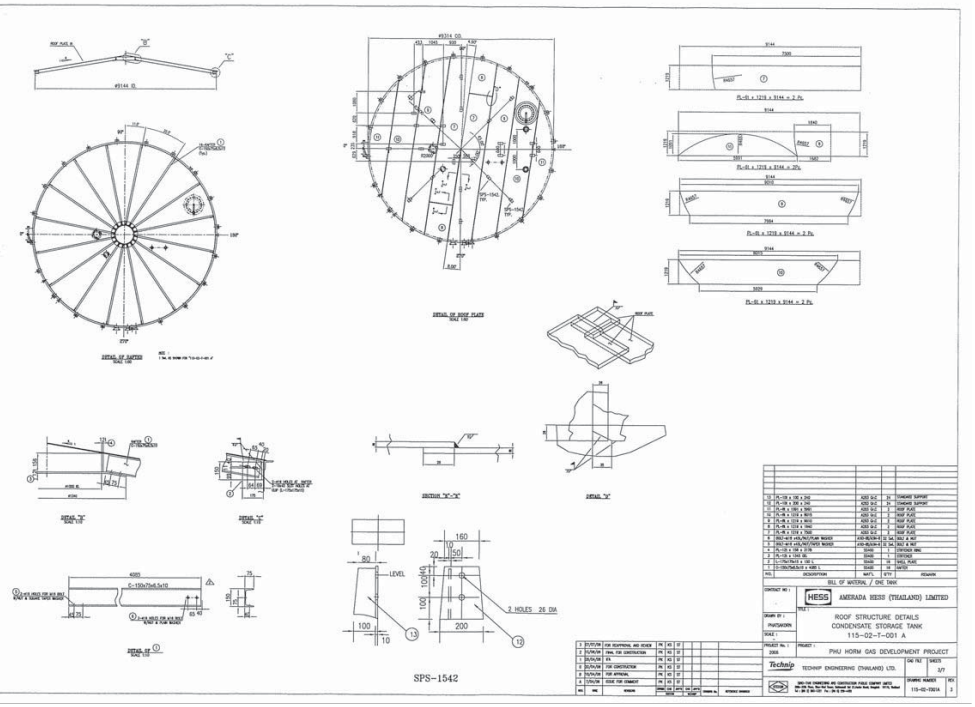

REV.	DATE	REVISION	DRAWN	CHK'D	APP'D	CLIENT APP'D	DRAWN No.	REFERENCE DRAWINGS
3	21/01/08	FOR RESUBMITTAL AND REVIEW	PN	KO	SF			
2	21/04/08	FINAL FOR CONSTRUCTION	PN	KO	SF			
1	28/04/08	IFA	PN	KO	SF			
0	20/04/08	FOR CONSTRUCTION	PN	KO	SF			
0	16/04/08	FOR APPROVAL	PN	KO	SF			
0	12/04/08	ISSUE FOR COMMENT	PN	KO	SF			

NO.	DESCRIPTION	MATL.	QTY	REMARK
13	PL-12B x 100 x 240	A283 Gr.C	16	CHANGE SUPPORT
12	PL-12B x 200 x 240	A283 Gr.C	24	CHANGE SUPPORT
11	PL-6B x 1361 x 3961	A283 Gr.C	2	ROOF PLATE
10	PL-6B x 1212 x 8610	A283 Gr.C	2	ROOF PLATE
9	PL-6B x 1212 x 4610	A283 Gr.C	2	ROOF PLATE
8	PL-6B x 1212 x 3960	A283 Gr.C	2	ROOF PLATE
7	PL-6B x 1212 x 7360	A283 Gr.C	2	ROOF PLATE
6	PN22-W18 x45LB/FT(FLAN MAXED)	A36-RB/F304-B	32	SHELL & NOZ
5	PN22-W18 x45LB/FT(FLAN MAXED)	A36-RB/F304-B	32	SHELL & NOZ
4	PL-12B x 1981 x 2030	SS400	1	STIFFENER RING
3	PL-12B x 1981 x 2030	SS400	1	STIFFENER
2	L-75X75X6 x 100 L	SS400	30	CARB PLATE
1	L-75X75X6 x 4100 L	SS400	16	CARB PLATE
NO.	DESCRIPTION	MATL.	QTY	REMARK

BILL OF MATERIAL / ONE TANK

CONTRACT NO : -
HESS AMERADA HESS (THAILAND) LIMITED
TITLE : ROOF STRUCTURE DETAILS CONDENSATE STORAGE TANK 115-02-T-001 A
DRAWN BY : PHATSAKORN
SCALE :
PROJECT NO. : 2006
PROJECT : PHU HORM GAS DEVELOPMENT PROJECT
Technip TECHNIP ENGINEERING (THAILAND) LTD.
DWG FILE / SHEETS 2/7
DRAWING NUMBER 115-02-T001A
REV. 3

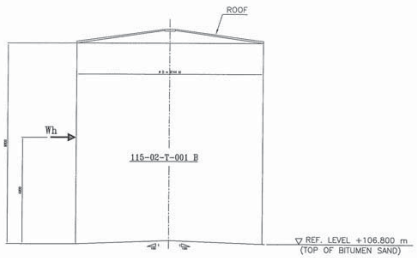

ELEVATION OF TANK

L O A D S

1. LOAD DUE TO WEIGHT OF TANK SHELL WITH ROOF
   P1 = 8.2 kN/m OF MEAN CIRCUMFERENCE
2. LIVE LOAD ON THE ROOF
   P2 = 3.0 kN/m OF MEAN CIRCUMFERENCE
3. LOAD DUE TO VACUUM
   P3 = 1.5 kN/m OF MEAN CIRCUMFERENCE
4. UPLIFT DUE TO INTERNAL PRESSURE
   P4 = 1.4 kN/m OF MEAN CIRCUMFERENCE-DURING OPERATION
5. LOAD DUE TO WEIGHT OF TANK BOTTOM
   Q1 = 0.805 kPa
6. MAX. LOAD DUE TO WATER FILLING UPTO HEIGHT OF 9.8 m DURING HYDROTEST
   Q2 = 105 kPa
7. MAX. LOAD DUE TO PROCESS FLUID FILLING UPTO HEIGHT OF 9.8 m IN TANK DURING OERATION.
   Q3 = 77.2 kPa
9. WIND LOAD
   HORIZONTAL WIND LOAD ON TANK Wh = 111.8 kN

GENERAL NOTES:-

1. ALL DIMENSIONS ARE IN mm AND LOADS IN kN. UNLESS OTHERWISE SPECIFIED.
2. PERMISSIBLE TOLERANCES AND SETTLEMENT ACCORDING TO API 650 LATEST EDITION.
3. ALL FOUNDATION LOAD INCLUDED ADDING FOR SAFETY FACTOR 10%
4. THE CRITICAL COMBINATION OF INDIVIDUAL LOADS ACTING ON THE FOUNDATION SHOULD BE CONSIDER BY THE CIVIL ENGINEER.

CONTRACT NO : -
HESS AMERADA HESS (THAILAND) LIMITED
TITLE : FOUNDATION LOAD DATA CONDENSATE STORAGE TANK 115-02-T-001 B
DRAWN BY : PHATSAKORN
SCALE :
PROJECT NO. : 2006
PROJECT : PHU HORM GAS DEVELOPMENT PROJECT
Technip TECHNIP ENGINEERING (THAILAND) LTD.
DWG FILE / SHEETS 3/7
DRAWING NUMBER 115-02-T001 B
REV. 3

REV.	DATE	REVISION	DRAWN	CHK'D	APP'D	CLIENT APP'D	DRAWN No.	REFERENCE DRAWINGS
3	21/01/08	FOR RESUBMITTAL AND REVIEW	PN	KO	SF			
2	21/04/08	FINAL FOR CONSTRUCTION	PN	KO	SF			
1	28/04/08	IFA	PN	KO	SF			
0	20/04/08	FOR CONSTRUCTION	PN	KO	SF			
0	16/04/08	FOR APPROVAL	PN	KO	SF			
0	12/04/08	ISSUE FOR COMMENT	PN	KO	SF			

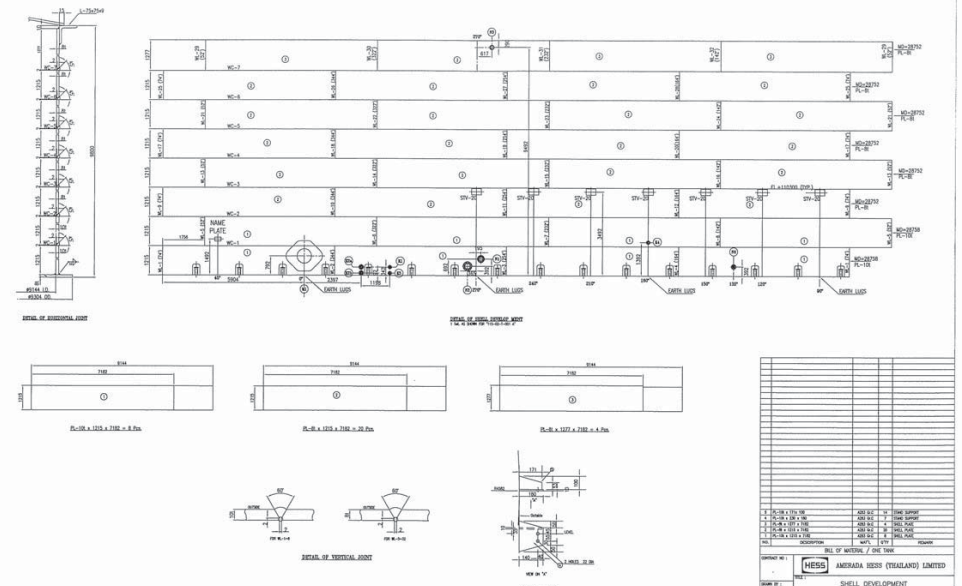

NO.	DESCRIPTION	MATL.	QTY	REMARK
3	PL-12B x 1114 x 1181	A283 Gr.C	16	CHANG SUPPORT
2	PL-12B x 200 x 240	A283 Gr.C	2	CHANG SUPPORT
1	PL-6B x 1217 x 7182	A283 Gr.C	4	SHELL PLATE
0	PL-6B x 1212 x 7182	A283 Gr.C	20	SHELL PLATE
1	PL-10B x 1215 x 7182	A283 Gr.C	4	SHELL PLATE
NO.	DESCRIPTION	MATL.	QTY	REMARK

BILL OF MATERIAL / ONE TANK

CONTRACT NO : -
HESS AMERADA HESS (THAILAND) LIMITED
TITLE : SHELL DEVELOPMENT CONDENSATE STORAGE TANK 115-02-T-001 A
DRAWN BY : PHATSAKORN
SCALE :
PROJECT NO. : 2006
PROJECT : PHU HORM GAS DEVELOPMENT PROJECT
Technip TECHNIP ENGINEERING (THAILAND) LTD.
DWG FILE / SHEETS 4/7
DRAWING NUMBER 115-02-T001A
REV. 3

REV.	DATE	REVISION	DRAWN	CHK'D	APP'D	CLIENT APP'D	DRAWN No.	REFERENCE DRAWINGS
3	21/01/08	FOR RESUBMITTAL AND REVIEW	PN	KO	SF			
2	21/04/08	FINAL FOR CONSTRUCTION	PN	KO	SF			
1	28/04/08	IFA	PN	KO	SF			
0	20/04/08	FOR CONSTRUCTION	PN	KO	SF			
0	16/04/08	FOR APPROVAL	PN	KO	SF			
0	12/04/08	ISSUE FOR COMMENT	PN	KO	SF			

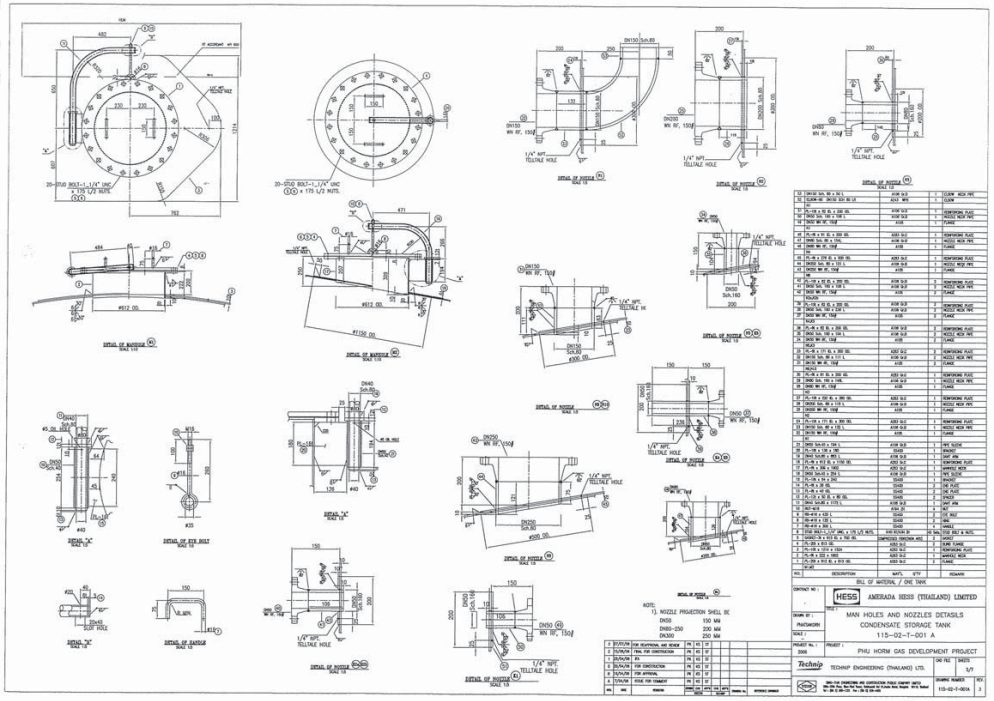
BILL OF MATERIAL / DWG DWN
HESS
AMERADA HESS (THAILAND) LIMITED
MAN HOLES AND NOZZLES DETASILS
CONDENSATE STORAGE TANK
115-02-T-001 A
PHU HORM GAS DEVELOPMENT PROJECT
TECHNIP ENGINEERING (THAILAND) LTD.
115-02-T-001A
3

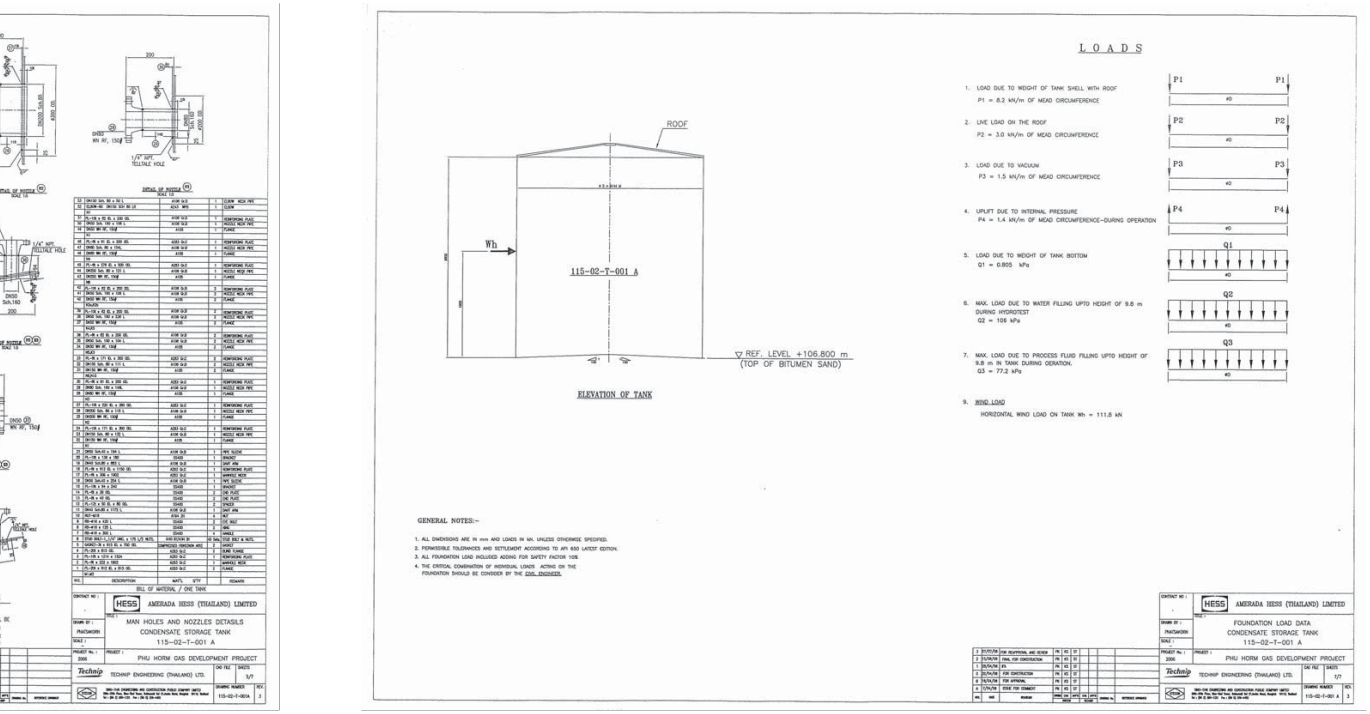
LOADS
ROOF
115-02-T-001 A
REF. LEVEL +106.800 m
(TOP OF BITUMEN SAND)
ELEVATION OF TANK
GENERAL NOTES:-
1. ALL DIMENSIONS ARE IN mm AND LOADS IN kN, UNLESS OTHERWISE SPECIFIED.
2. PERMISSIBLE TOLERANCES AND SETTLEMENT ACCORDING TO API 650 LATEST EDITION.
3. ALL FOUNDATION LOAD INCLUDED ADDING FOR SAFETY FACTOR 10%
4. THE CRITICAL COMBINATION OF INDIVIDUAL LOADS ACTING ON THE FOUNDATION SHOULD BE CONSIDER BY THE ENG. ENGINEER.
FOUNDATION LOAD DATA
CONDENSATE STORAGE TANK
115-02-T-001 A
PHU HORM GAS DEVELOPMENT PROJECT
TECHNIP ENGINEERING (THAILAND) LTD.
115-02-T-001A
3

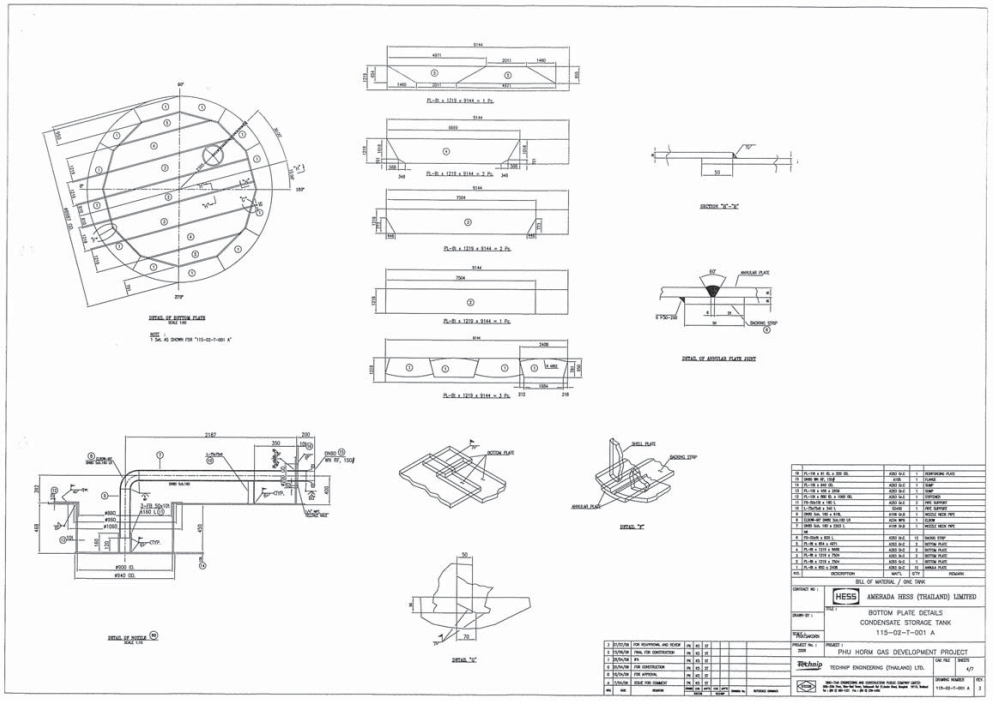
BILL OF MATERIAL / DWG DWN
HESS
AMERADA HESS (THAILAND) LIMITED
BOTTOM PLATE DETAILS
CONDENSATE STORAGE TANK
115-02-T-001 A
PHU HORM GAS DEVELOPMENT PROJECT
TECHNIP ENGINEERING (THAILAND) LTD.
115-02-T-001 A
3

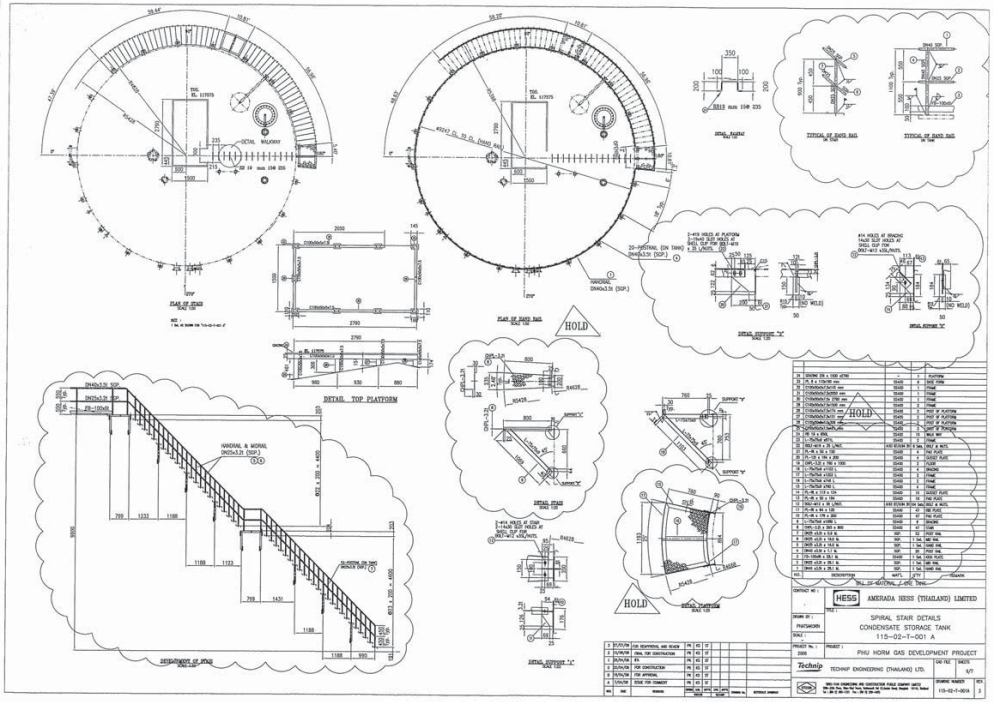
HOLD
SPIRAL STAIR DETAILS
CONDENSATE STORAGE TANK
115-02-T-001 A
PHU HORM GAS DEVELOPMENT PROJECT
TECHNIP ENGINEERING (THAILAND) LTD.
115-02-T-001A
3

DOCUMENT TRANSMITTAL

Project	: Phuhorm Gas Development, Mechanical Work	Date	: 12-Jul-06
Owner	: Amerada Hess (Thailand) Limited	Ref. No.	: DT-M024
Client	: Technip Engineering (Thailand) Limited	Contract No.	: 2002-1300-01AMD.0
		Rev	: 2

To : Mr. Colin Watson
Construction Manager

Subject : **Shop Drawing for Condensate Storage Tank (REV 3).**

Dear Sir,
We have pleasure in submitting you herewith the following document(s) for :-

☐ Information ☐ Approval ☐ Constructior ☐ Procurement
☒ Review & Comments ☐ Quotation ☐ Records ☐ Hand Over

Q'ty	Document No.	Rev. No.	Title
1	-	2	Drawing List
7	-	2	Shop Drawing for Condensate Storage Tank 115-02-T-001 A(REV 3).
1	-	2	Drawing List
7	-	2	Shop Drawing for Condensate Storage Tank 115-02-T-001 B(REV 3).

Attachment : 16 Sheet (s)
CC. :
File :
Received by : JT
Date : 13 / 07 / 06

Yours Faithfully,

Denphong Srirach
Construction Manager

TO STECON
Your request for approval(s) is :
[ ] Returned for correction as noted and re-issue [ ] Approved [ ] Approved as noted
[ ] Returned for acknowlegde and awaiting for approval later (see note)
Note :

SIGNATURE :
NAME :
DATE :

SINO - THAI ENGINEERING & CONSTRUCTION PUBLIC COMPANY LIMITED

Ref. No. : DT-M024 Rev.2

DRAWING LIST

No.	Drawing No.	Rev No.	Sheets.	Size.	Page.
1	115-02-T-001 B	3	1 of 7	A3	1
2	115-02-T-001 B	3	2 of 7	A3	1
3	115-02-T-001 B	3	3 of 7	A3	1
4	115-02-T-001 B	3	4 of 7	A3	1
5	115-02-T-001 B	3	5 of 7	A3	1
6	115-02-T-001 B	3	6 of 7	A3	1
7	115-02-T-001 B	3	7 of 7	A3	1

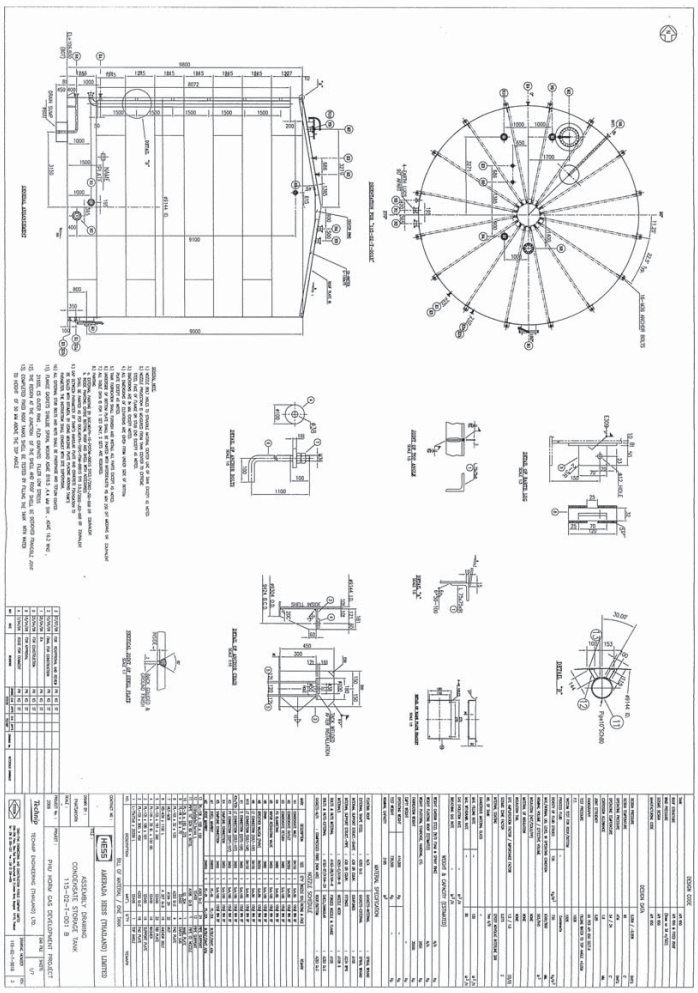

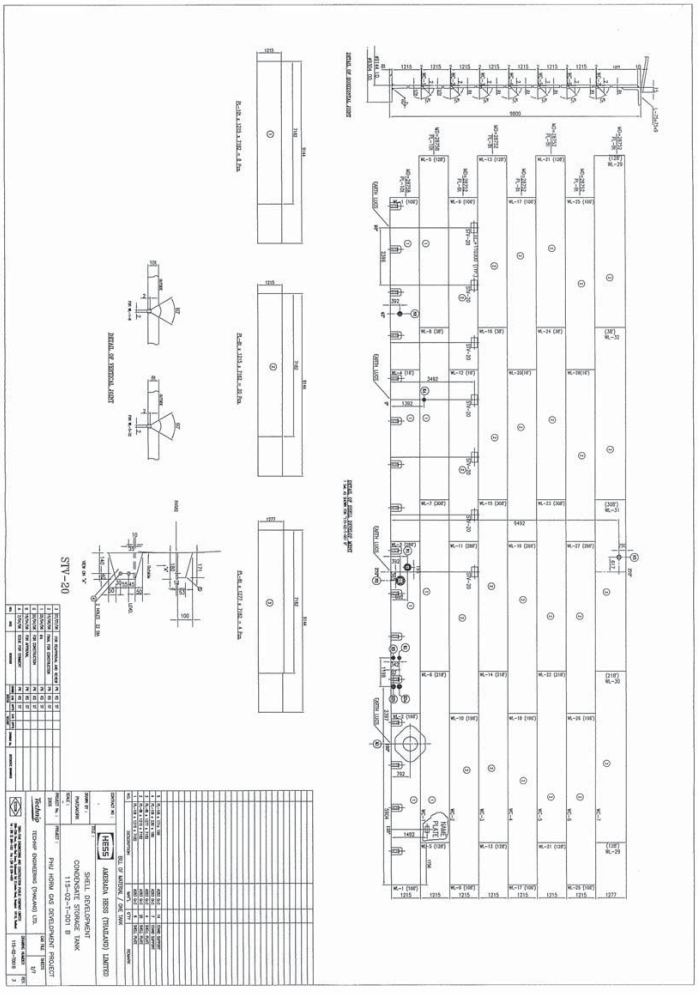

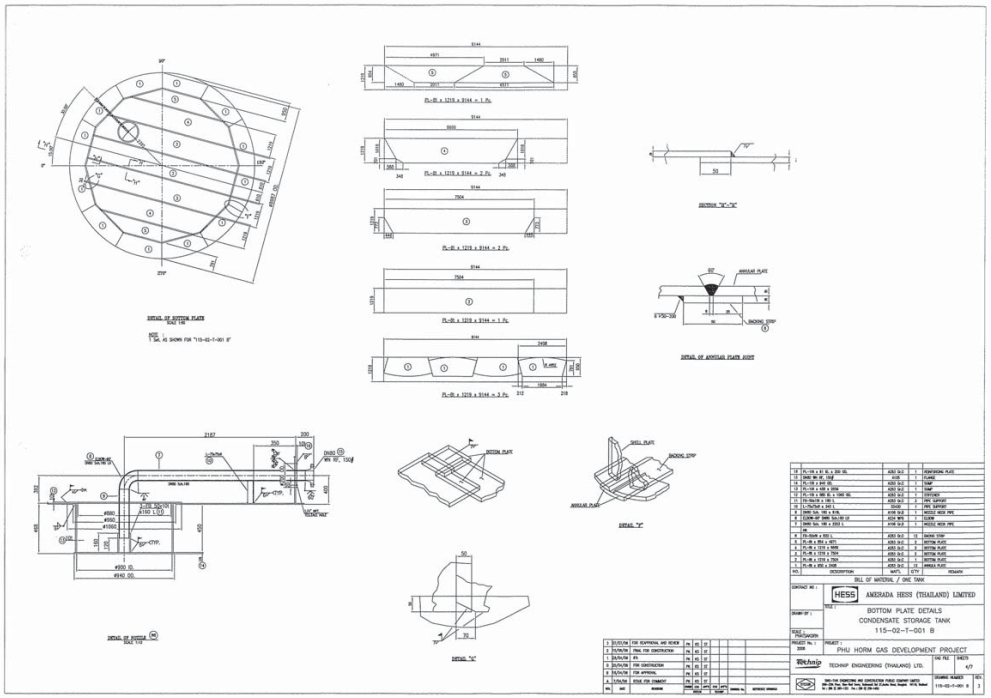
BILL OF MATERIAL / DWG TANK
AMERADA HESS (THAILAND) LIMITED
BOTTOM PLATE DETAILS
CONDENSATE STORAGE TANK
115-02-T-001 B
PHU HORM GAS DEVELOPMENT PROJECT
TECHNIP ENGINEERING (THAILAND) LTD.

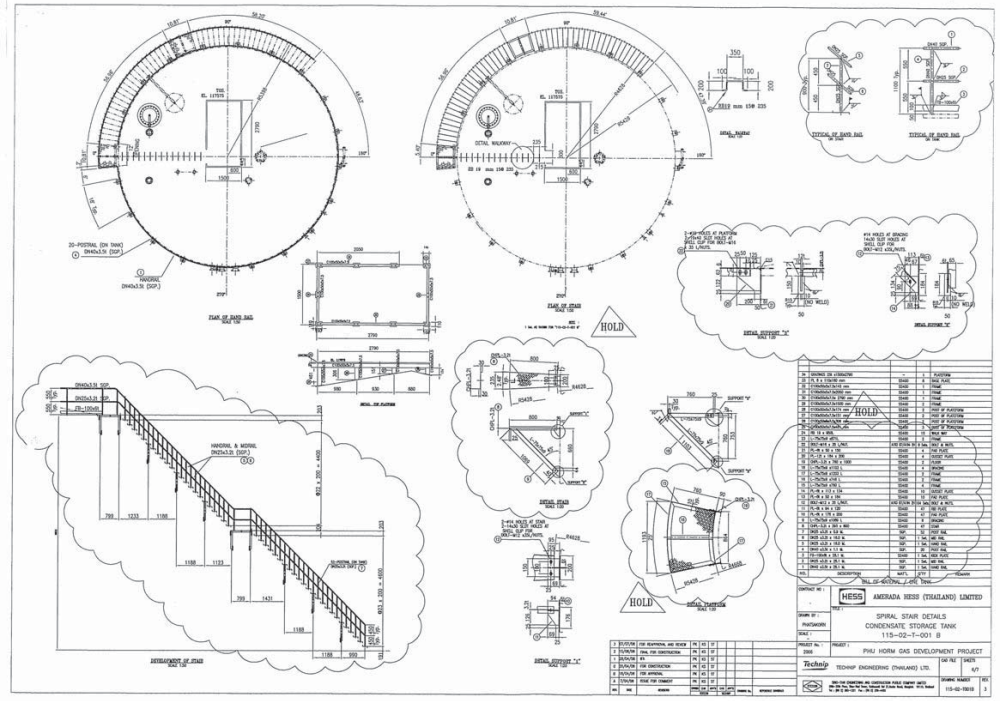
HOLD
BILL OF MATERIAL / DWG TANK
AMERADA HESS (THAILAND) LIMITED
SPIRAL STAIR DETAILS
CONDENSATE STORAGE TANK
115-02-T-001 B
PHU HORM GAS DEVELOPMENT PROJECT
TECHNIP ENGINEERING (THAILAND) LTD.

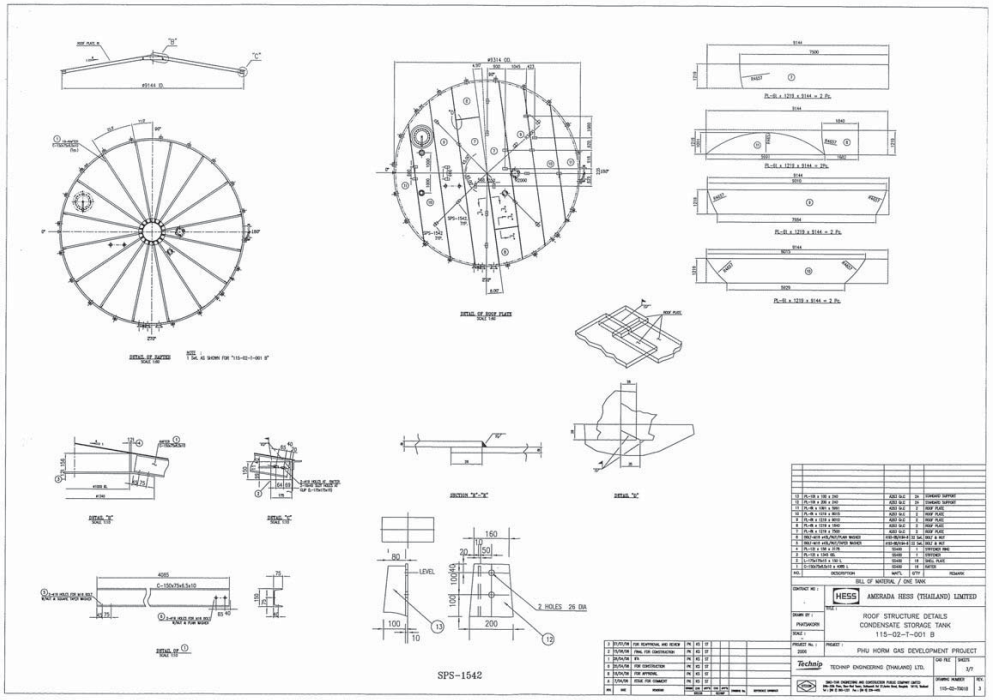
SPS-1542
BILL OF MATERIAL / DWG TANK
AMERADA HESS (THAILAND) LIMITED
ROOF STRUCTURE DETAILS
CONDENSATE STORAGE TANK
115-02-T-001 B
PHU HORM GAS DEVELOPMENT PROJECT
TECHNIP ENGINEERING (THAILAND) LTD.

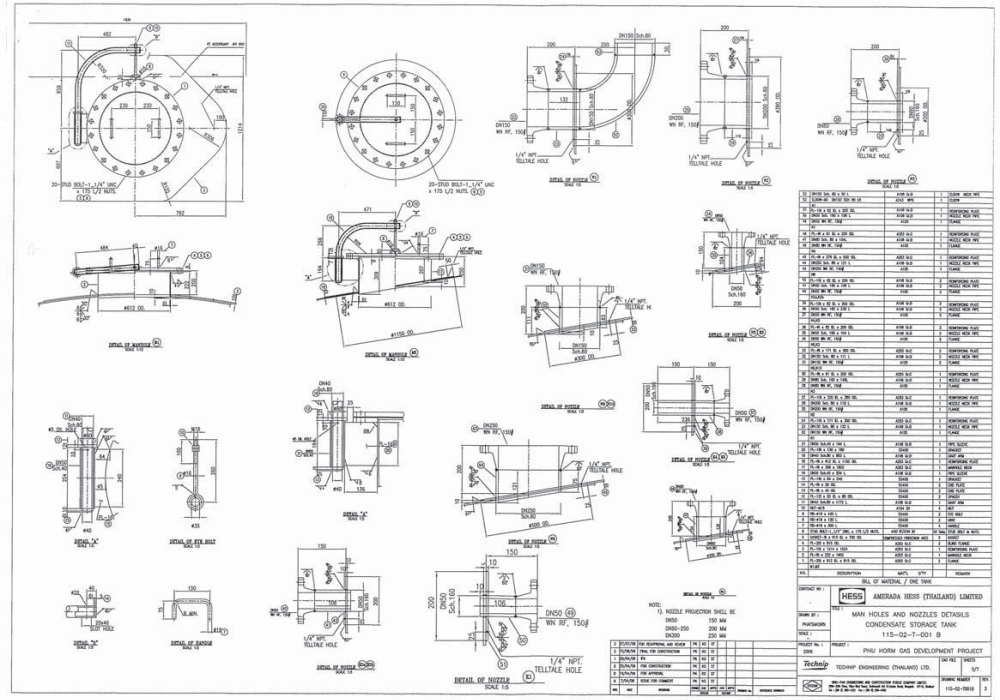
BILL OF MATERIAL / DWG TANK
AMERADA HESS (THAILAND) LIMITED
MAN HOLES AND NOZZLES DETASILS
CONDENSATE STORAGE TANK
115-02-T-001 B
PHU HORM GAS DEVELOPMENT PROJECT
TECHNIP ENGINEERING (THAILAND) LTD.

SCAN.

ORIGINAL

STECON

DOCUMENT TRANSMITTAL

Project	: Phuhorm Gas Development, Mechanical Work	Date	: 20-Jun-06
Owner	: Amerada Hess (Thailand) Limited	Ref. No.	: DT-M039
Client	: Technip Engineering (Thailand) Limited	Contract No.	: 2002-1300-01AMD.0

To : Mr. Colin Watson
Construction Manager

Subject : **Technical Data of Painting Materials for Condensate Storage Tank**

Dear Sir,
We have pleasure in submitting you herewith the following document(s) for :-

☐ Information ■ Approval ☐ Constructio ☐ Procurement
☐ Review & Comments ☐ Quotation ☐ Records ☐ Hand Over

Q'ty	Document No.	Rev. No.	Title
6	-	-	Technical Data of Painting Materials for Condensate Storage Tank

[redacted]

Attachment : 6 page(s)

[redacted]

Construction Manager

PROJECT NO. 2002

DISCIPLINES	ACT	COMP
MKT. MGT.		
PMT		
ADMIN		
COST / PLANNING		
CIVIL / STRUCT.		
MECHANICAL (PIPING)		
MECHANICAL (HVAC)		
MECHANICAL (EQUIP)	✓	
ELECTRICAL		
PROCESS		
INSTRUMENT		
PROCUREMENT		
PROPOSAL		
APM	✓	
FILE		

TO STECON
Your request for approval(s) is :
( ) Returned for correction as noted and re-issue ( ) Approved ( ) Approved as noted
( ) Returned for acknowlegde and awaiting for approval later (see note)
Note :

Dusadee W.

SIGNATURE :
NAME :
DATE :

Print on date 26-06-06

STECON Sino - Thai Engineering & Construction Public Company Limited

Project	: Phu Horm Gas Development Project, Udornthani, Thailand.	
Owner	: Amerada Hess Thailand Limited.	Job : J-2298-2-M
Main Contractor	: Technip Engineering (Thailand) Ltd.	Date : 20 June 2006
Contractor	: Sino - Thai Engineering & Construction Public Company Limited.	Contract No. : 2002-1300-01 AMD. 0

Technical Data of Painting Materials for Condensate Storage Tank

(Tankguard Storage - Jotun Thailand Limited)

Product Comparison

	Tankguard Storage	Interline 399
Product description	High solid phenolic epoxy coating	Epoxy novlac tank lining
Recommended use	Internal lining for the internal lining of storage tanks	Internal lining of storage vessels and process vessels
Temperature withstand	95c with crude oil immersed	95c
Volume solids	63%	67%
Colour	Light Red, Red	Limited
Gloss Level	Flat	Not applicable
Solvent Resistance	Excellent	Excellent
Recommended Thickness	100-200 microns dry	85-125 microns dry
	160-320 microns wet	127-187 microns wet
Theorifical Coverage	6.3 m2/ltr. at 100 microns	6.7 m2/ltr. at 100 microns
Method of Application	Airless spray, Brush for small area	Airless spray, Air Spray, Roller, Brush
Drying Time	at 35c	at 40c
- Surface Dry	2 hrs.	3 hrs.
- Dry to Handle	5 hrs.	6 hrs.
- Dry to Recoat(min)	5 hrs.	16 hrs.
- Dry to Recoat(max)	30 days	2 days
Surface Preparation required	Sa 2 1/2	Sa 2 1/2

Jotun Paint Specification

CLIENT :Sino-Thai Engineering & Construction PCL.
Project :Phu Horm Gas Development
Paint specification for Hydrocarbon Waste Water Service

SPECIFICATION		JOTUN PRODUCT					
Generic Description	Product Name	VS %	DFT	m^2/l	$l/unit$	$m^2/$ unit
			per coat			
ALL PRODUCTS	Surface Preparation: Blast cleaning to sa 2.5					
Phenolic Epoxy	Tankguard Storage	63	125	5.04	18.80	94.75
Phenolic Epoxy	Tankguard Storage	63	125	5.04	18.80	94.75
Thinner	Jotun thinner No 23				3.79	
	Total Thickness 250 micron					

Jotun Thailand Limited.,
49/26 Moo12, Kingkaew Road, Rajatanwa, Bangplee, Samutprakarn 10540
Tel (052) 750-3355 Fax (052) 750-3344 ,750-2930

JOTUN

Technical Data
TANKGUARD STORAGE

JOTUN

Product description
Tankguard Storage is a two-component, high solid phenolic epoxy coating with high resistance to a wide range of chemicals and solvents.

Recommended use
Corrosion protection for the internal lining of steel storage tanks being resistant to a wide range of chemicals including, but not limited to, crude oil and aromatic and aliphatic solvents and others.

Film thickness and spreading rate

	Minimum	Maximum	Typical
Film thickness, dry (µm)	100	200	125
Film thickness, wet (µm)	160	320	200
Theoretical spreading rate (m^2/l)	6.3	3.2	5

Physical properties

Colour	Light Red, Red
Solids (vol %)*	63 ± 2
Flash point	28°C ± 2 (Setaflash)
Gloss	Flat
Water resistance	Very good
Solvent resistance	Excellent
Chemical resistance	Excellent
Flexibility	Fair

*Measured according to ISO 3233:1998 (E)

Surface preparation

All surfaces should be clean, dry and free from contamination. The surface should be assessed and treated in accordance with ISO 8504.

Bare steel
Cleanliness: Blast cleaning to min. Sa 2 ½ (ISO 8501 1:1988). Roughness: using abrasives suitable to achieve Grade Medium G (50 - 85 µm, Ry5) (ISO 8503-2).

Coated surfaces
Approved on top of thin coat (50 µm) of Tankguard HB

Other surfaces
The coating may be used on other substrates. Please contact your local Jotun office for more information.

Condition during application
The temperature of the substrate should be minimum 15°C and at least 3°C above the dew point of the air. The temperature and the relative humidity should be measured in the vicinity of the substrate. Good ventilation is usually required in confined areas to ensure proper drying. The coating should not be exposed to oil, chemicals or mechanical stress until fully cured.

Application methods

Spray	Use airless spray
Brush	Recommended for stripe coating and small areas, care must be taken to achieve the specified dry film thickness.

Application data

Mixing ratio (volume)	6,5 parts Comp. A (base) to be mixed thoroughly with 1 part Comp. B (curing agent)
Induction time	20 minutes.
Pot life (23°C)	4 hours (Reduced at higher temp.)
Thinner/Cleaner	Jotun Thinner No. 23
Guiding data airless spray	
Pressure at nozzle	15 MPa (150 kp/cm² 2100 psi)
Nozzle tip	0.46-0.69 mm (0.018-0.027")
Spray angle	40-80°
Filter	Check to ensure that filters are clean.

Drying time
Drying times are generally related to air circulation, temperature, film thickness and number of coats, and will be affected correspondingly. The figures given in the table are typical with:
* Good ventilation (Outdoor exposure or free circulation of air)
* Typical film thickness
* One coat on top of inert substrate

Substrate temperature	**15°C**	**23°C**	**40°C**
Surface dry	12 h	4 h	2 h
Through dry	20 h	10 h	4 h
Cured	14 d	7 d	3 d
Dry to recoat, minimum	20 h	10 h	4 h
Dry to recoat, maximum [1]	30 d	30 d	30 d

1. The surface should be free from chalking and contamination prior to application. If the maximum dry to recoat time is exceeded, please contact Jotun Protective Coatings for advice.

The given data must be considered as guidelines only. The actual drying time/times before recoating may be shorter or longer, depending on film thickness, ventilation, humidity, underlying paint system, requirement for early handling and mechanical strength etc. A complete system can be described on a system sheet, where all parameters and special conditions could be included.

Typical paint system

Tankguard Storage **2 x 125 µm** **(Dry Film Thickness)**

Other systems may be specified, depending on area of use

Storage
The product must be stored in accordance with national regulations. Storage conditions are to keep the containers in a dry, cool, well ventilated space and away from source of heat and ignition.Containers must be kept tightly closed.

Handling
Handle with care. Stir well before use.

Packing size
20 litre unit: 16.3 litres Comp. A (base) in a 20 litre container and 2.5 litres Comp. B (curing agent) in a 3 litre container
Packing may vary from country to country according to local requirements.

Health and safety
Please observe the precautionary notices displayed on the container. Use under well ventilated conditions. Do not breathe or inhale mist. Avoid skin contact. Spillage on the skin should immediately be removed with suitable cleanser, soap and water. Eyes should be well flushed with water and medical attention sought immediately.

For detailed information on the health and safety hazards and precautions for use of this product, we refer to the Material Safety Data Sheet.

DISCLAIMER
The information in this data sheet is given to the best of our knowledge based on laboratory testing and practical experience. However, as the product is often used under conditions beyond our control, we cannot guarantee anything but the quality of the product itself. We reserve the right to change the given data without notice.

Head Office & Nordic
Jotun A/S
P.O. Box 2021
N-3248 Sandefjord
Norway
Phone +47 33 45 70 00
Fax +47 33 46 46 13

Europe
Jotun Paints (Europe) Ltd.
Stather Road, Flixborough
North Lincolnshire DN15 8RR
United Kingdom
Phone +44 172 44 00 000
Fax +44 172 44 00 100

Middle East
Jotun U.A.E Ltd. LLC.
Al Quoz Industrial Area
P.O Box 3671
Dubai U.A.E
Phone +971 4 3 39 50 00
Fax +971 4 3 38 06 66

South East Asia
Jotun (Singapore) Pte. Ltd.
No 11-15, Sixth Lok Yang Road
Jurong
Singapore 628 111
Phone +65 6265 4711
Fax +65 6265 7484

Jotun is a World Wide company with factories, sales offices and stocks in more than 50 countries. For your nearest local Jotun address please contact the nearest regional office or visit our website at www.jotun.com

ISSUED 14 FEBRUARY 2002 BY JOTUN
THIS DATA SHEET SUPERSEDES THOSE PREVIOUSLY ISSUED

PDF Version :

☐

JOTUN
Jotun Paints

สีโจตัน

Sino-Thai Engineering & Construction PCL.
29th Fl., Sino-Thai Tower,
32/59 Asoke Rd.,
Bangkok 10110

23 June 2006

Attn : K. Denphong Srirach

Dear K. Denphong,

Jotun Thailand Limited would like to confirm that **Tankguard Storage** can withstand with crude oil temperature at 95c and we would like to recommend the paint system as follows:

1st coat : Tankguard Storage 125 microns
2nd coat : Tankguard Storage 125 microns

For your consideration.

Your sincerely,
JOTUN THAILAND LIMITED

Rujirek Ork-weha
Sales Manager. Proterctive

Jotun Thailand Limited บริษัท โจตันไทย จำกัด

เอกสารแนบ 2-3

แผนผังแสดงการติดตั้งวัสดุดูซับเสียงในเครื่องกำเนิดไฟฟ้า

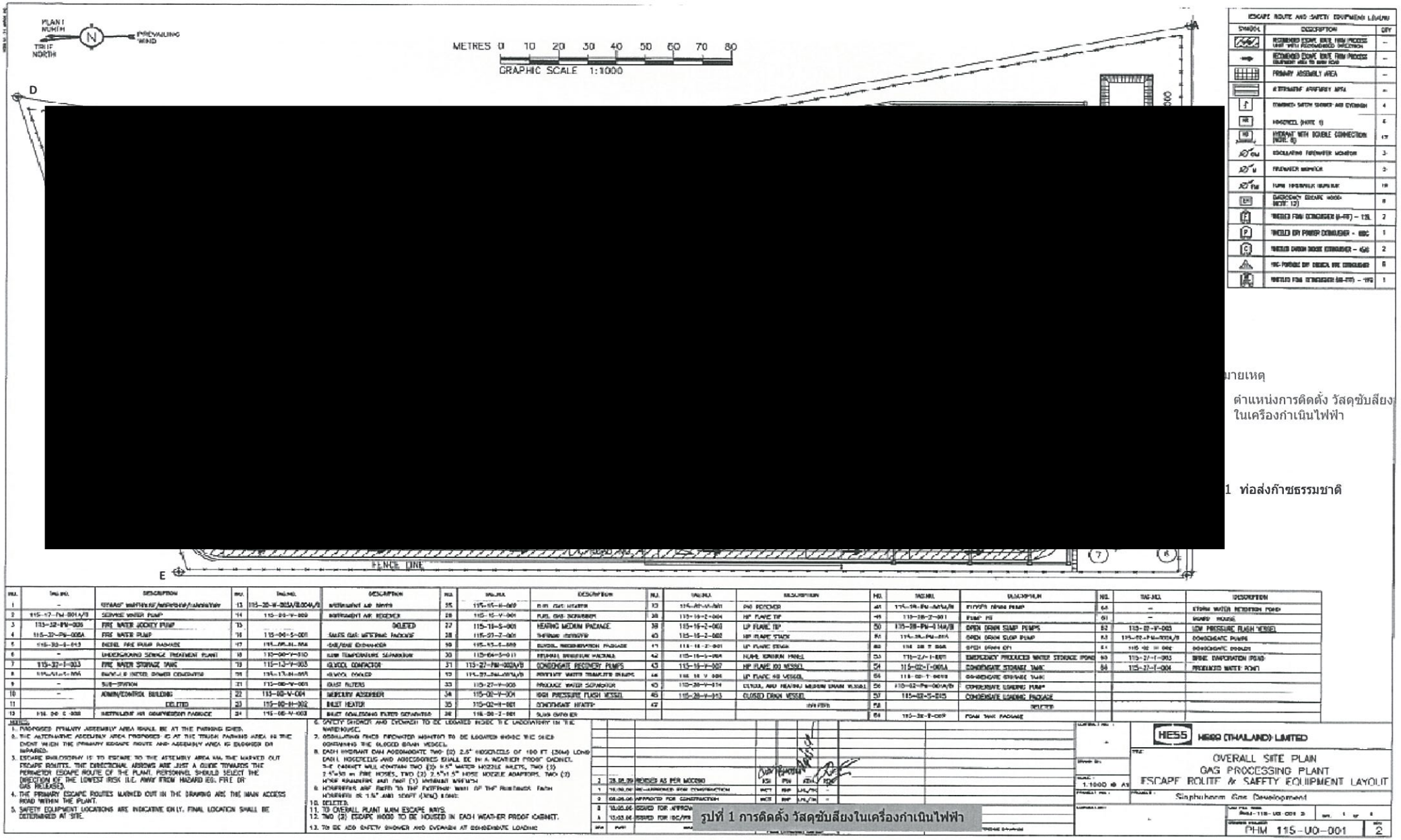

มายเหตุ

ตำแหน่งการติดตั้ง วัสดุซับสีย
ในเครื่องกำเนินไฟฟ้า

1 ท่อส่งก๊าซธรรมชาติ

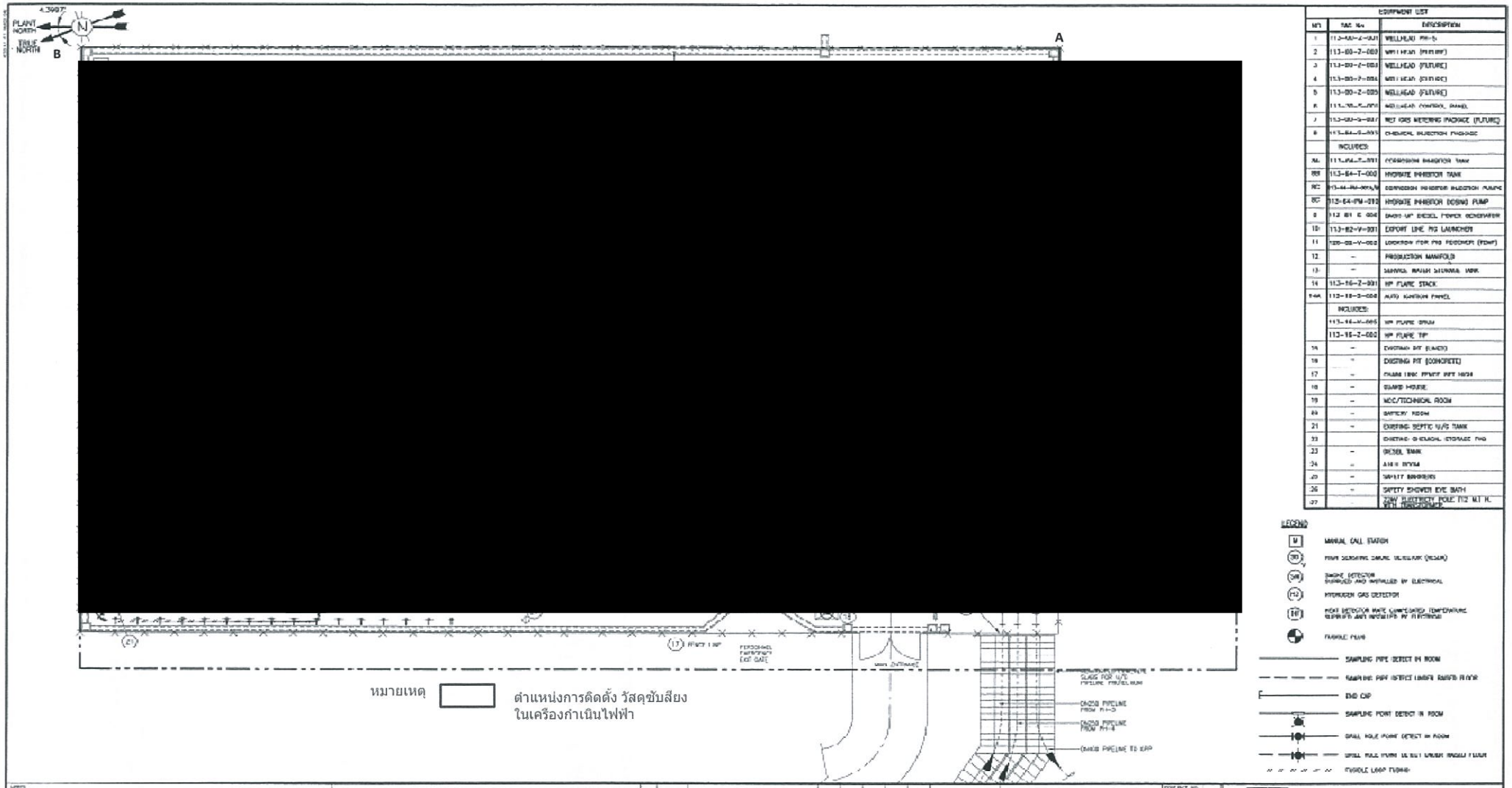

หมายเหตุ ตำแหน่งการติดตั้ง วัสดุซับสียง ในเครื่องกำเนิดไฟฟ้า

NOTES
1. ALL DIMENSIONS ARE IN MILLIMETERS UNLESS OTHERWISE NOTED.
2. ALL TAG NUMBERS TO BE DESIGNED BY PTS LOCATION PREFIX "113".
3. ALL VESDA EQUIPMENT, SIGNAL SAFETY AND INSTALLATION ARE PROVIDED BY VESDA SUPPLIER.
4. ACTUAL LOCATION OF ALL FIRE & GAS DETECTORS TO BE CHECKED AND CONFIRMED AT SITE.
5. EXPLOSION MCC/TECHNICAL ROOM AND SAFETY POOL, SEE DWG. NO. PHM-113-KL-820.
6. AUDIBLE & VISUAL ALARMS ARE PROVIDED AND INSTALLED BY ELECTRICAL, SEE DWG. NO. PHM-113-EL-910

รูปที่ 2 การติดตั้ง วัสดุซับสียงในเครื่องกำเนิดไฟฟ้า พื้นที่ฐานผลิต เอ

REV	DATE	REVISION	DRAWN	CHK	APPD	CHK	APPD
A	10/06/03	IN-HOUSE REVIEW					
B	13/06/03	APPROVED FOR CONSTRUCTION	NPS	TPL			
C	10/12/03	ISSUED FOR REVIEW	NPS	TPL			

TH/PH-DEV/017

DRAWN BY: NPS

SCALE: 1 : 100

DATE: 2003

Technip
TECHNIP ENGINEERING (THAILAND) LTD.

HESS
HESS (THAILAND) LIMITED

FIRE AND GAS SYSTEM
FIRE & GAS DETECTOR LAYOUT
WELLPAD A

Phu Horm Gas Development

PHM-113-KL-802 | SHT 1 OF 1

DRAWING NUMBER: PHM-113-KL-802 | REV: 1

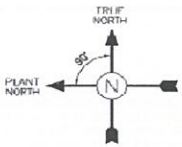

[redacted]

ตำแหน่งการติดตั้ง วัสดุซับสียง
ในเครื่องกำเนินไฟฟ้า

EQUIPMENT LIST		
NO.	TAG No.	DESCRIPTION
1	111-00-Z-001	WELLHEAD PH 3
2	111-00-Z-002	WELLHEAD (FUTURE)
3	111-00-Z-003	WELLHEAD (FUTURE)
4	111-00-Z-004	WELLHEAD (FUTURE)
5		–
6	111-30-S-001	WELLHEAD CONTROL PANEL
7	111-00-S-007	WET GAS METERING PACKAGE
8	111-64-S-003	CHEMICAL INJECTION PACKAGE
	INCLUDES:	
8A	111-64-T-001	CORROSION INHIBITOR TANK
8B	111-64-T-002	HYDRATE INHIBITOR TANK
8C	111-64-PM-001A/B	CORROSION INHIBITOR INJECTION PUMPS
8D	111-00-S-007	HYDRATE INHIBITOR DOSING PUMP
9	111-51-E-004	BACK-UP DIESEL POWER GENERATOR
10	–	LULAMUN FUK MG LAUNCHER (TEMP)
11	–	PRODUCTION MANIFOLD
12	–	SERVICE WATER STORAGE TANK
13	–	VENT STACK
14	–	EXISTING PH (UNLU)
15	–	EXISTING PH (NO USING)
16	–	CHAIN LINK FENCE 8FT HIGH
17	–	REMARK HOUSE
18	–	MCC/TECHNICAL ROOM
19	–	BATTERY ROOM
20	–	DIESEL TANK
21	–	AHU ROOM
22	–	SAFETY BARRIERS
23	–	22kV ELECTRICTY POLE (12 M.) H. WITH TRANSFORMER
24	–	SAFETY SHOWER EYE BATH

LEGEND

- M — MANUAL CALL STATION
- SU — HIGH SENSITIVE SMOKE DETECTOR (VESDA)
- SM — SMOKE DETECTOR SUPPLIED AND INSTALLED BY ELECTRICAL
- H2 — HYDROGEN GAS DETECTOR
- HF — HEAT DETECTOR RATE COMPENSATED TEMPERATURE SUPPLIED AND INSTALLED BY ELECTRICAL
- FUSIBLE PLUG
- SAMPLING PIPE DETECT IN ROOM
- SAMPLING PIPE DETECT UNDER RAISED FLOOR
- END CAP
- SAMPLING POINT DETECT IN ROOM
- DRILL HOLE POINT DETECT IN ROOM
- DRILL HOLE POINT DETECT UNDER RAISED FLOOR
- FUSIBLE LOOP TUBING

NOTES:
1. ALL DIMENSIONS ARE IN MILLIMETERS UNLESS OTHERWISE NOTED.
2. ALL TAG NUMBERS SHALL BE PREQUELLED BY ITS LOCATION PREFIX '111'.
3. ALL VESDA EQUIPMENT, DESIGN, SUPPLY AND INSTALLATION ARE PROVIDED BY VESDA SUPPLIER.
4. ACTUAL LOCATION OF ALL FIRE & GAS DETECTORS TO BE CHECKED AND CONFIRMED AT SITE.
5. LAYOUT OF MCC/TECHNICAL ROOM AND BATTERY ROOM, SEE DWG. NO. PHM-111-KL-800.
6. AUDIBLE & VISUAL ALARMS ARE PROVIDED AND INSTALLED BY ELECTRICAL, SEE DWG. NO. PHM-111-EL-010.

รูปที่ 3 การติดตั้ง วัสดุซับสียงในเครื่องกำเนินไฟฟ้า พื้นที่ฐานผลิต บี

REV	DATE	REVISION	DRAWN	CHK	APPR	CHK	APPR
1	0/08/97	AS-BUILT DRAWING	NPS	BRD	TK		
B	19/10/96	APPROVED FOR CONSTRUCTION	NPS	TTK	TK		
A	16/10/96	ISSUED FOR APPROVAL	NPS	TTK	TK		

DRAWING NO. | REFERENCE DRAWING

EQUIPMENT NO.: TH/PH DEV/017
DRAWN BY: NPS
SCALE: 1 : 300
PROJECT NO.: 2002
CONTRACTOR: Technip — TECHNIP ENGINEERING (THAILAND) LTD.

HESS — AMERADA HESS (THAILAND) LIMITED

TITLE: FIRE AND GAS SYSTEM
FIRE & GAS DETECTOR LAYOUT
WELLPAD B

PROJECT: Phu Horm Gas Development

PAD FILE NAME: PHM-111-KL-002 | SH. 1 OF 1
DRAWING NUMBER: PHM-111-KL-802 | REV. 1

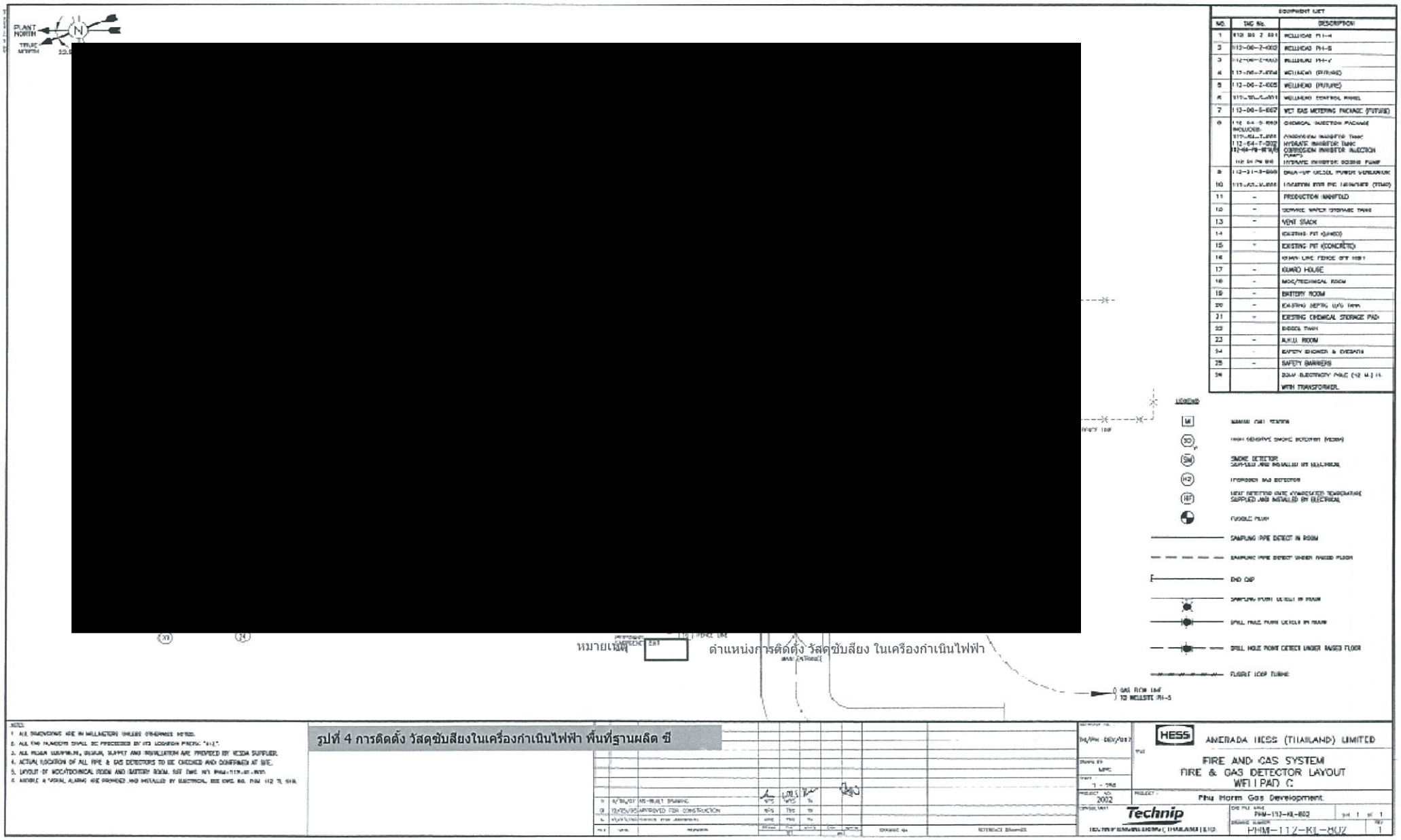
PLANT NORTH
TRUE NORTH
EQUIPMENT LIST
NO. | TAG No. | DESCRIPTION
1 | WELLHEAD PH-4
2 | 112-06-Z-4003 | WELLHEAD PH-5
3 | WELLHEAD PH-6
4 | WELLHEAD (FUTURE)
5 | 112-06-Z-4005 | WELLHEAD (FUTURE)
6 | WELLHEAD CONTROL PANEL
7 | 112-06-S-0007 | WET GAS METERING PACKAGE (FUTURE)
8 | CHEMICAL INJECTION PACKAGE
INCLUDES:
HYDRATE INHIBITOR TANK
HYDRATE INHIBITOR INJECTION PUMPS
CORROSION INHIBITOR INJECTION PUMPS
HYDRATE INHIBITOR BOOSTER PUMP
9 | DIESEL FUEL TANK
10 | PRODUCTION MANIFOLD
11 | - | PRODUCTION MANIFOLD
12 | - | SERVICE WATER STORAGE TANK
13 | - | VENT STACK
14 | - | EXISTING PIT (LINED)
15 | - | EXISTING PIT (CONCRETE)
16 | KOWRO HOUSE
17 | - | KOWRO HOUSE
18 | - | MCC/TECHNICAL ROOM
19 | - | BATTERY ROOM
20 | - | EXISTING METRO UPS ROOM
21 | - | EXISTING CHEMICAL STORAGE PAD
22 | DIESEL TANK
23 | - | AHU ROOM
24 | - | SAFETY SHOWER & EYEWASH
25 | - | SAFETY BARRIERS
26 | SOLAR ELECTRICITY PANEL (12 M.) H. WITH TRANSFORMER.
LEGEND
SMOKE DETECTOR SUPPLIED AND INSTALLED BY ELECTRICAL
HEAT DETECTOR (FIXED TEMPERATURE) SUPPLIED AND INSTALLED BY ELECTRICAL
FUSIBLE PLUG
SAMPLING PIPE DETECT IN ROOM
SAMPLING PIPE DETECT UNDER RAISED FLOOR
END CAP
SPILL HOLE POINT DETECT IN ROOM
SPILL HOLE POINT DETECT UNDER RAISED FLOOR
FUSIBLE LOOP TUBING
GAS FLOW LINE TO WELLSITE PH-5
หมายเหตุ
ตำแหน่งการติดตั้ง วัสดุซับสียง ในเครื่องกำเนิดไฟฟ้า
NOTES:
1. ALL DIMENSIONS ARE IN MILLIMETERS UNLESS OTHERWISE NOTED.
2. ALL EQUIPMENTS SHALL BE PROCEEDED BY ITS LOCATION PREFIX "PH-".
3. ALL FLAME WARNING, SIGNAL, SUPPLY AND INSTALLATION ARE PROVIDED BY HESS SUPPLIER.
4. ACTUAL LOCATION OF ALL FIRE & GAS DETECTORS TO BE CHECKED AND CONFIRMED AT SITE.
5. LAYOUT OF MCC/TECHNICAL ROOM AND BATTERY ROOM. SEE DWG. NO. PHM-117-KL-003.
6. MOBILE & VISUAL ALARMS ARE PROVIDED AND INSTALLED BY ELECTRICAL. SEE DWG. NO. PHM-112-TI-018.
รูปที่ 4 การติดตั้ง วัสดุซับสียงในเครื่องกำเนิดไฟฟ้า พื้นที่ฐานผลิต ซี
HESS
AMERADA HESS (THAILAND) LIMITED
FIRE AND GAS SYSTEM
FIRE & GAS DETECTOR LAYOUT
WELLPAD C
Phu Horm Gas Development
Technip
PHM-117-KL-002
PHM-117-KL-002
1

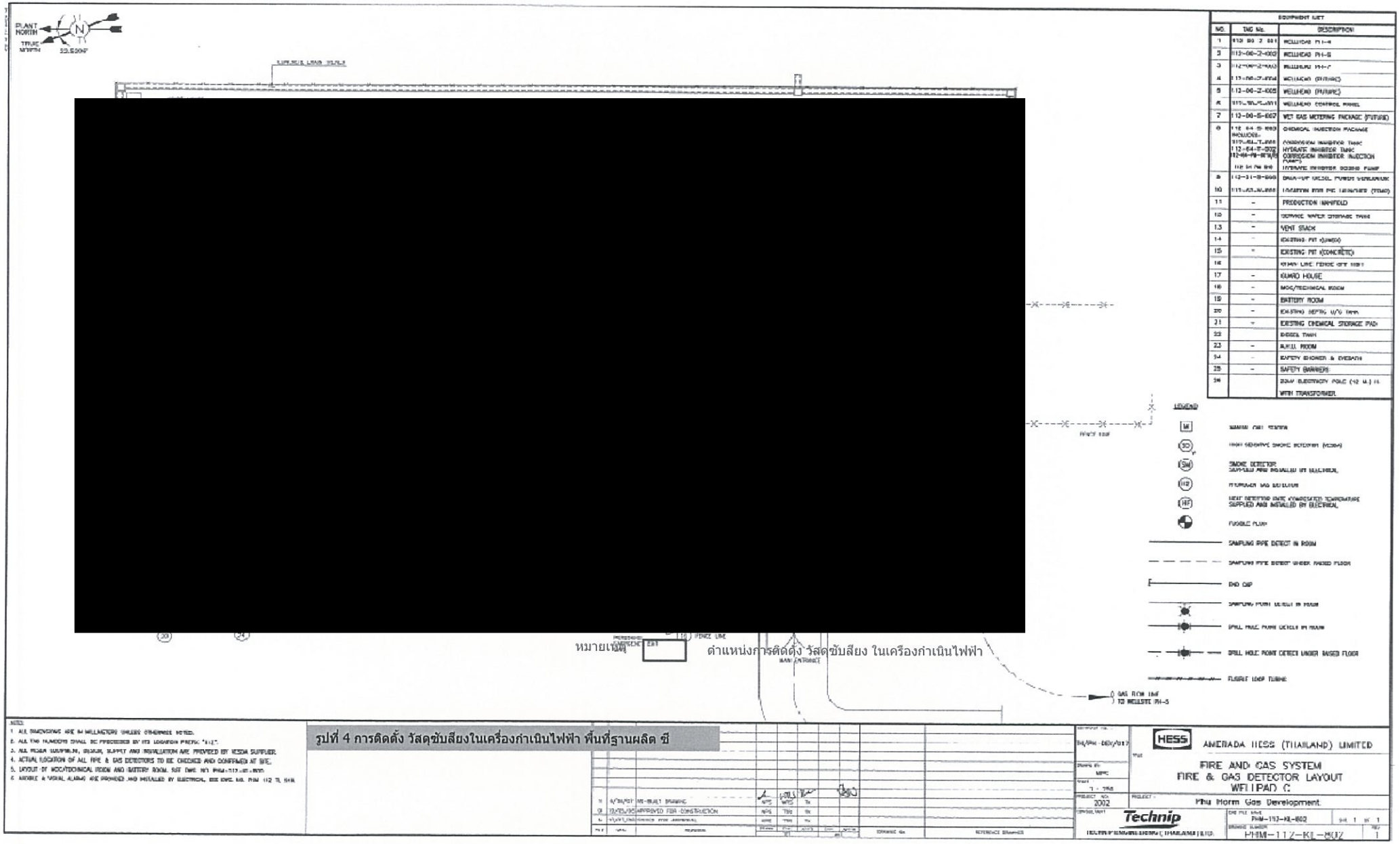

หมายเหตุ ตำแหน่งการติดตั้ง วัสดุขับสียง ในเครื่องกำเนินไฟฟ้า

รูปที่ 4 การติดตั้ง วัสดุขับสียงในเครื่องกำเนินไฟฟ้า พื้นที่ฐานผลิต ซี

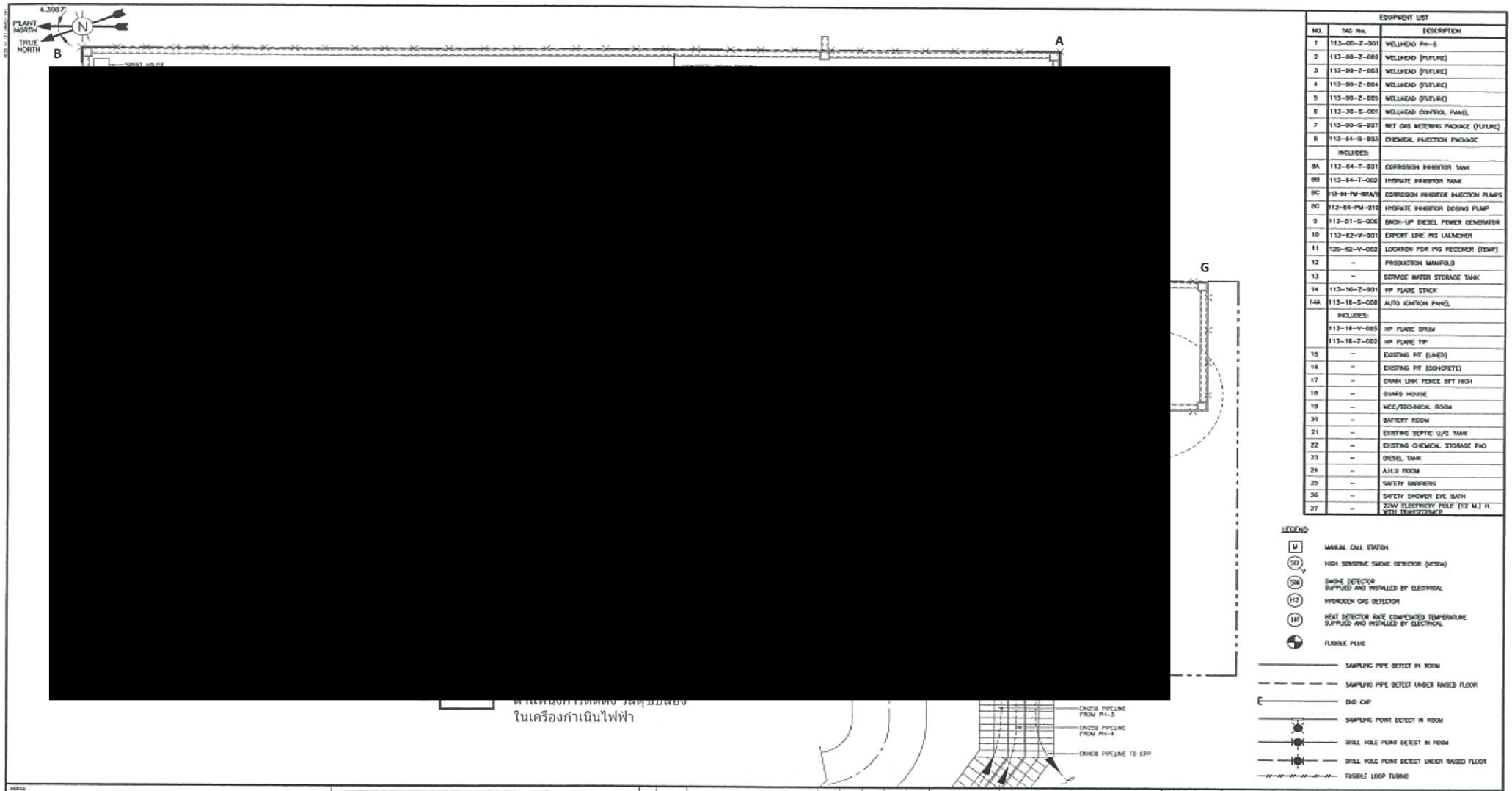

รูปที่ 2 การติดตั้ง วัสดุซับสียงในเครื่องกำเนินไฟฟ้า พื้นที่ฐานผลิต เอ

EQUIPMENT LIST		
NO.	TAG No.	DESCRIPTION
1	111-00-Z-001	WELLHEAD PH-3
2	111-00-Z-002	WELLHEAD (FUTURE)
3	111-00-Z-003	WELLHEAD (FUTURE)
4	111-00-Z-004	WELLHEAD (FUTURE)
5	–	–
6	111-30-S-001	WELLHEAD CONTROL PANEL
7	111-00-S-007	WET GAS METERING PACKAGE
8	111-64-S-003	CHEMICAL INJECTION PACKAGE
	INCLUDES:	
8A	111-64-T-001	CORROSION INHIBITOR TANK
8B	111-64-T-002	HYDRATE INHIBITOR TANK
8C	111-64-PM-001A/B	CORROSION INHIBITOR INJECTION PUMPS
8D	111-00-S-007	HYDRATE INHIBITOR DOSING PUMP
9	111-51-S-006	BACK-UP DIESEL POWER GENERATOR
10	–	LOCATION FOR PIG LAUNCHER (TEMP)
11	–	PRODUCTION MANIFOLD
12	–	SERVICE WATER STORAGE TANK
13	–	VENT STACK
14	–	EXISTING PIT (LINED)
15	–	EXISTING PIT (NO LINING)
16	–	CHAIN LINE FENCE 8FT HIGH
17	–	GUARD HOUSE
18	–	MCC/TECHNICAL ROOM
19	–	BATTERY ROOM
20	–	DIESEL TANK
21	–	A.H.U ROOM
22	–	SAFETY BARRIERS
23	–	22kV ELECTRICTY POLE (12 M.) H. WITH TRANSFORMER.
24	–	SAFETY SHOWER EYE BATH

LEGEND

- M — MANUAL CALL STATION
- SD — HIGH SENSITIVE SMOKE DETECTOR (VESDA)
- SM — SMOKE DETECTOR SUPPLIED AND INSTALLED BY ELECTRICAL
- H2 — HYDROGEN GAS DETECTOR
- HF — HEAT DETECTOR RATE COMPESATED TEMPERATURE SUPPLIED AND INSTALLED BY ELECTRICAL
- FUSIBLE PLUG
- SAMPLING PIPE DETECT IN ROOM
- SAMPLING PIPE DETECT UNDER RAISED FLOOR
- END CAP
- SAMPLING POINT DETECT IN ROOM
- DRILL HOLE POINT DETECT IN ROOM
- DRILL HOLE POINT DETECT UNDER RAISED FLOOR
- FUSIBLE LOOP TUBING

NOTES:
1. ALL DIMENSIONS ARE IN MILLIMETERS UNLESS OTHERWISE NOTED.
2. ALL TAG NUMBERS SHALL BE PRECEEDED BY ITS LOCATION PREFIX "111".
3. ALL VESDA EQUIPMENT, DESIGN, SUPPLY AND INSTALLATION ARE PROVIDED BY VESDA SUPPLIER.
4. ACTUAL LOCATION OF ALL FIRE & GAS DETECTORS TO BE CHECKED AND CONFIRMED AT SITE.
5. LAYOUT OF MCC/TECHNICAL ROOM AND BATTERY ROOM, SEE DWG. NO. PHM-111-KL-800.
6. AUDIBLE & VISUAL ALARMS ARE PROVIDED AND INSTALLED BY ELECTRICAL, SEE DWG. NO. PHM-111-TL-910.

รูปที่ 3 การติดตั้ง วัสดุซับสียงในเครื่องกำเนินไฟฟ้า พื้นที่ฐานผลิต บี

REV	DATE	REVISIONS	DRAWN	CHK	APP'D	CHK	APP'D
1	6/06/07	AS-BUILT DRAWING	NPS	MRS	TK		
0	19/05/06	APPROVED FOR CONSTRUCTION	NPS	TRR	TK		
A	10/03/06	ISSUED FOR APPROVAL	NPS	TRR	TK		

DRAWING No. | REFERENCE DRAWINGS

CONTRACT NO.: TH/PH-DEV/017
DRAWN BY: NPS
SCALE: 1 : 300
PROJECT NO.: 2002
CONSULTANT: Technip — TECHNIP ENGINEERING (THAILAND) LTD.

HESS — AMERADA HESS (THAILAND) LIMITED

TITLE: FIRE AND GAS SYSTEM
FIRE & GAS DETECTOR LAYOUT
WELLPAD B

PROJECT: Phu Horm Gas Development

CAD FILE NAME: PHM-111-KL-802 — SHT 1 OF 1
DRAWING NUMBER: PHM-111-KL-802 — REV 1